HINDUSTAN AERONAUTICS LIMITED
MCSRDC DIVISION
VIMANAPURA POST
BENGALURU - 560017

Phone No: +9180 2232 2747
Email: sanjay.kumar5@hal-india.co.in
Web: www.hal-india.co.in

REQUEST FOR QUOTATION (RFQ)

Tender Type: Open e-Tender
Bid System: Two Bid System

Tender No: MC/S461/1744/22/1
Tender Date: 20.01.2022
Due date: 17.02.2022 at 14.00 HRS (IST)
Opening date: 17.02.2022 at 14:10 HRS (IST)

Important Notes

i. Bidders are requested to submit their proposal (Technical bid and Price bid) online at HAL's e-procurement portal (http://eproc.hal-india.co.in or link to e-Procurement through www.hal-india.co.in).

ii. **Technical Bid**: This bid (to be complied in full) should only include technical terms (Annexure-1), Commercial terms and conditions (Annexure-2) and Public Procurement (Preference to Make in India) (Appendix-A). This bid should not contain any price details. If prices are indicated in the technical bid or attached as a part of technical bid even in the form of PDF, the offer will not be considered for evaluation.

iii. Refer Appendix-A of RFQ – 'Public Procurement (Preference to Make in India). The offers sought from all suppliers i.e. Class-I, Class-II Local supplier, Non-local suppliers/ foreign supplier).

iv. **Price Bid:** The bid should include only pricing aspect (Annexure-3). The price format provided should be strictly followed and to be uploaded under BID cover only. Any deviation shall lead to rejection of such vendor's offer.

v. **PRE-BID Meeting:** A pre bid meeting has been arranged on 31.01.2022 at MCSRDC Division, HAL , Bangalore at 14.00 PM (IST). All the bidders are invited to attend the meeting in order to understand the requirement and clarify any doubts before submission of bids. All the Interested vendors have to forward the names of attendees for the pre bid meeting to email ID: suresh.patri@hal-india.co. and sanjay.kumar5@hal-india.co.in in latest by 29/01/2022

vi. Bidders are advised to ensure that they have submitted the bids well before the due date and time of bid submission of tender. HAL e-portal will not allow submission of bids once closing date & time of tender is crossed. HAL shall not be responsible if bidder is not able to submit the bid on account of system/network/internal failures.

vii. Only Integrity Pact and local content certification in original should be submitted in a separate sealed cover with tender reference and it should reach HAL, MCSRDC, IMM Dept on or before the due date& time of Tender.

viii. It is mandatory to indicate each individual price for all the spares in Sheet 2 of the price bid.

I. Hindustan Aeronautics Limited (HAL), a Navaratna Public Sector Enterprise is engaged in Design, Development, Manufacture, and Repair & Overhaul of Aircraft, Aero Engines, Helicopters, Avionics and Accessories (www.hal-india.co.in).

Note: *Bidders are advised to visit HAL website/e-procurement portal till the closing date of tender as all future corrigendum with regard to this tender, if any, shall be published only at HAL website/ e-procurement portal and not through press advertisement.*

Phone No: +9180 2232 2747
Email: sanjay.kumar5@hal-india.co.in
Web: www.hal-india.co.in

II. Mission and Combat Systems Research & Development Centre (MCSRDC) a R&D Centre of HAL is involved in development of Mission and Combat systems for Fixed wing and Rotary wing Aircraft and other aerial vehicles intends to procure following items:

Sl. No.	Description of Requirement	Qty
1	**Supply of 3 axis Control Loading System (CLS), System Installation, Integration and Testing (Technical Requirement as per Enclosure -1)**	2 Sets

III. This RFQ is strictly governed by terms and conditions as indicated in Technical Compliance matrix (**Refer Annexure-1**), Commercial terms compliance matrix for (**Refer Annexure-2),** Public Procurement (Preference to Make in India) (**Refer Appendix-A**) and Price Bid (**Refer Annexure -3**).

IV. Conditional offers are liable for rejection.

For Hindustan Aeronautics Limited

(P.Suresh Kumar)
Dy.General Manager (IMM)

Note: *Bidders are advised to visit HAL website/e-procurement portal till the closing date of tender as all future corrigendum with regard to this tender, if any, shall be published only at HAL website/ e-procurement portal and not through press advertisement.*

Encl-1 of RFQ No:MC/S461/1744/22/1

TECHNICAL REQUIREMENTS

OF

CONTROL LOADING SYSTEM (CLS)

FOR FIXED BASE FULL MISSION SIMULATOR

(FBFMS) OF JAGUAR AIRCRAFT

Document No: MCSRDC/JSIM-DIII/TR/CLS/02/00
Date : 6th Dec, 2021

Hindustan Aeronautics Limited
Mission and Combat System Research and Design Centre
Bangalore – 560 017

©Hindustan Aeronautics Limited, MCSRDC, 2021
This document contains proprietary information of Hindustan Aeronautics Limited. This document is confidential and must not be reproduced, copied, disclosed or utilized in any way without prior written permission from Hindustan Aeronautics Limited. This should be used only for intended purpose.

TECHNICAL REQUIREMENTS
OF
CONTROL LOADING SYSTEM (CLS)
FOR FIXED BASE FULL MISSION SIMULATOR
(FBFMS) OF JAGUAR AIRCRAFT

Document No: MCSRDC/JSIM/TR/CLS/02/00
Date: 6th, Dec ., 2021

RESTRICTED
This document is the property of Hindustan Aeronautics Limited and should not be reproduced or communicated without written authorization

Table of Contents

1. Introduction 4
2. Purpose 4
3. FBFMS simulator layout 4
4. CLS System Requirements 5
5. Brief of Flight control system of Jaguar aircraft 5
5.1. Control Column 6
5.1.1. Pitch Control 7
5.1.2. Roll control 9
5.2. Rudder Pedals 10
5.3. Details of other controls 12
6. CLS Specification 12
7. CLS Architecture 13
8. CLS Hardware Requirements 13
9. CLS Software requirements 16
10. Power Supply 16
11. Measurements on Jaguar aircraft 16
12. Operating Conditions 17
13. Storage Conditions 17
14. Other Requirements 17

This document is the property of Hindustan Aeronautics Limited and should not be reproduced or communicated without written authorization

1. Introduction

Mission and Combat Systems Research and Design Centre (MCSRDC), Hindustan Aeronautics Limited (HAL) is involved in Design and Development of two (02) numbers of Fixed Base Full Mission Simulators (FBFMS) for a single seat Jaguar fighter aircraft. One of the deliverable items of FBFMS is the Control Loading System (CLS). The objective of CLS is to provide the artificial force feel on the pilot control column and rudder pedals as per the actual force felt during the real flight of Jaguar aircraft.

2. Purpose

The purpose of this document is to define the technical requirements for design, develop, supply, installation and integration of single seat Jaguar fighter aircraft specific 3 - axis Active Control Loading System (CLS) along with the other Scope of Work (SOW) brought out at subsequent sections of this document.

3. FBFMS simulator layout

The proposed FBFMS simulator layout is as shown in Fig-1. It consists of cockpit shell placed over a support platform, an observation Ladder, pilot ladder and racks / electronic equipment below the cockpit shell. The entire setup is positioned inside a 3.65m radius dome.

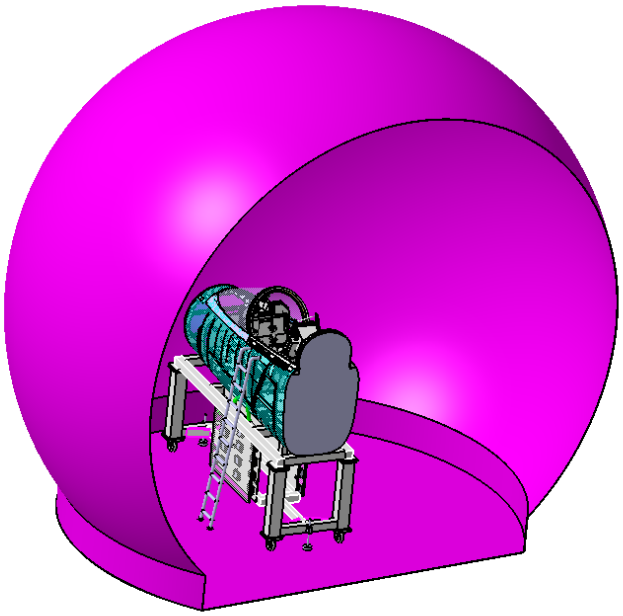

Fig-1**:** Proposed Simulator Layout

This document is the property of Hindustan Aeronautics Limited and should not be reproduced or communicated without written authorization

4. CLS System Requirements

1. CLS shall be single seat Jaguar aircraft type specific active control loading system for the FBFMS.

2. The control loading system is required to provide artificial force feel in all three controls viz., Pitch, Roll and Yaw.

3. CLS shall be a fully active Digital Electric Control Loading System with no pneumatic and no hydraulic components.

4. FBFMS cockpit controls are comprised of control column and rudder pedals. The force exerted by the control loader actuators on these controls shall be transmitted by using mechanical linkages.

5. CLS Hardware shall consist of Electric control loader actuator, servo drive, power supply module, control cabinet, circuit breakers, emergency reset, CLS computer, connecting cables and other accessories to meet the CLS operational requirements.

6. Control loader Actuators shall be COTS based standard electric servomotors and shall be driven by servo drive unit. No other actuator types are acceptable.

7. CLS computer shall interface with Host Computer of FBFMS through Ethernet.

5. Brief of Flight control system of Jaguar aircraft

The Jaguar aircraft is controlled in the three axes by the primary flying controls viz pitch, roll and yaw. The control surfaces for these three axes are operated by irreversible, hydraulic powered flying control units. The control rods and linkages run along the sides of the Jaguar aircraft cockpit are as shown in Fig - 2.

This document is the property of Hindustan Aeronautics Limited and should not be reproduced or communicated without written authorization

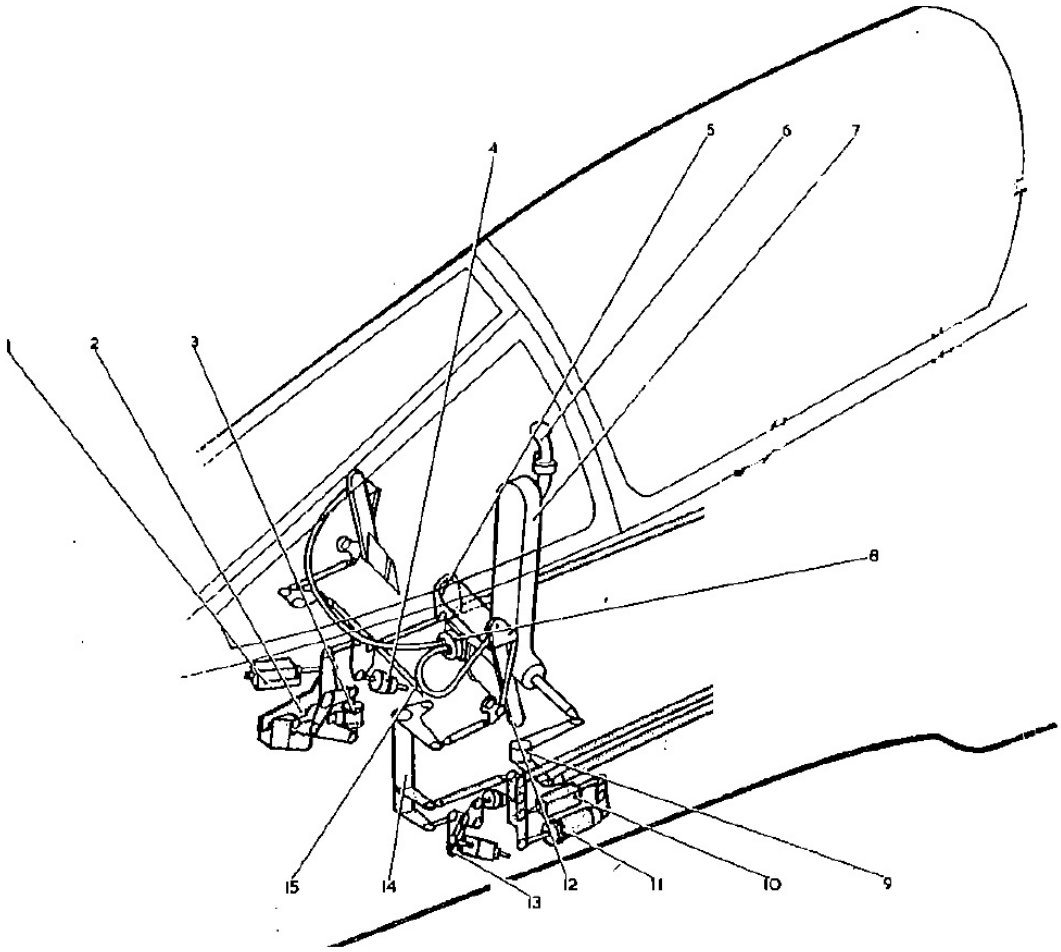

Fig-2**:** Aircraft Flight Controls Layout

1. Tail plane trim actuator
2. Artificial force control unit
3. Tail plane spring box
4. Pitch Dashpot
5. Tail plane control
6. Control column pistol grip
7. Control column
8. Rudder pedal Adjuster unit
9. Roll bell crank
10. Rudder trim actuator
11. Rudder spring box
12. Port rudder pedal
13. Rudder Gearing assembly
14. Rudder bell crank
15. Rudder pedal interconnecting rod

Details of control column and pedals operations are described in following paragraphs.

5.1. Control Column

Control Column has two movements for Pitch and Roll control. Control Column with Stick Top is shown in Fig - 3 for reference. The hollow control column body is rectangular in section and has the roll bell crank mounted in the lower part.

This document is the property of Hindustan Aeronautics Limited and should not be reproduced or communicated without written authorization

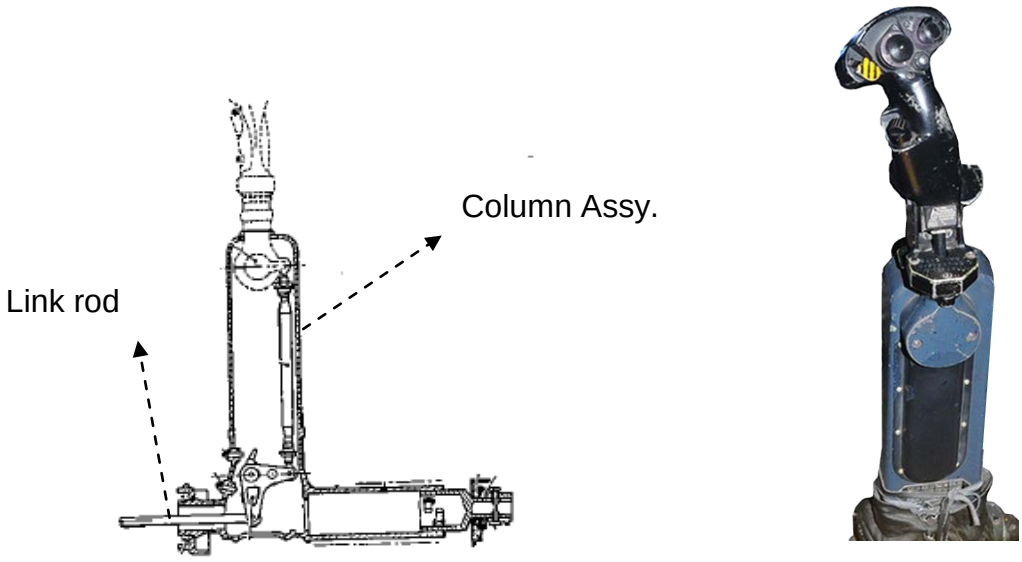

Fig-3: Control Column and Stick Top

5.1.1. Pitch Control

The Control column total range of travel is 22° 5’ for nose up and down is as shown in Fig- 4. Pitch flight control is a powered control system. The pilot is provided with artificial force feel. Artificial feel is proportional to the control column displacement, aircraft speed and altitude as indicated in Table-1 and Table - 2. The initial break out force to move pitch control is between 0 and 0.54 daN.

This document is the property of Hindustan Aeronautics Limited and should not be reproduced or communicated without written authorization

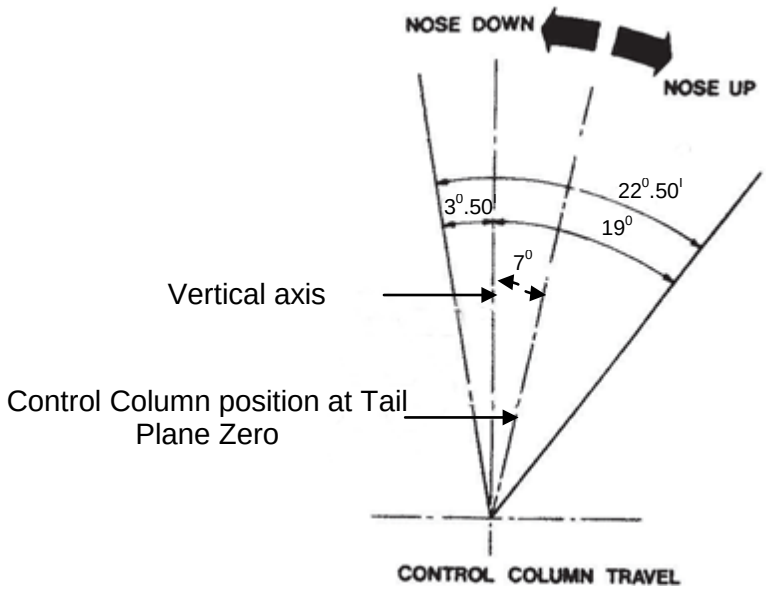

Fig – 4: Control Column travel in Pitch

Note: The range of 7 deg. aft of the vertical axis is termed as point of inflection. At the point of inflection, control surface deflections are small.

Pitch Column Displacement / Indicated Air speed (Knots)	Feel Force (daN)			
	1 deg	2 deg	3 deg	4 deg
300	1.3 ± 0.25	2.15 ± 0.35	2.9 ± 0.4	3.5 ± 0.5
400	1.6 ± 0.25	2.6 ± 0.4	3.4 ± 0.4	4.1 ± 0.5
450 and above	1.75 ± 0.25	2.9 ± 0.4	3.9 ± 0.5	4.7 ± 0.5

Table 1: Pitch Feel Values – Forward

Pitch Column Displacement / Indicated Air Speed (Knots)	Feel Force (daN)					
	2 deg	4 deg	6 deg	8 deg	10 deg	12 deg
300	2.5±0.4	4.5±0.5	6.75±0.75	10.7±1	16.5±1.5	23.5±2
400	3.0±0.4	5.0±0.5	8.0±0.75	13.0±1.25	20.5±2	30±3
450 and above	3.25±0.4	5.6±0.5	9.0±1	15±1.5	24±2	36.5±3.5

Table 2: Pitch control Feel Values – Aft

This document is the property of Hindustan Aeronautics Limited and should not be reproduced or communicated without written authorization

5.1.2. Roll control

The Control column range for roll control of travel is 36° ± 1° in port and 36° ± 1 in star board side is as shown in Fig-5. Roll flight control is powered control system. The pilot is provided with artificial force feel. Artificial feel is proportional to the rate of control column movement as per Table 3. The initial break out force to move roll control is between 0 and 0.3 daN.

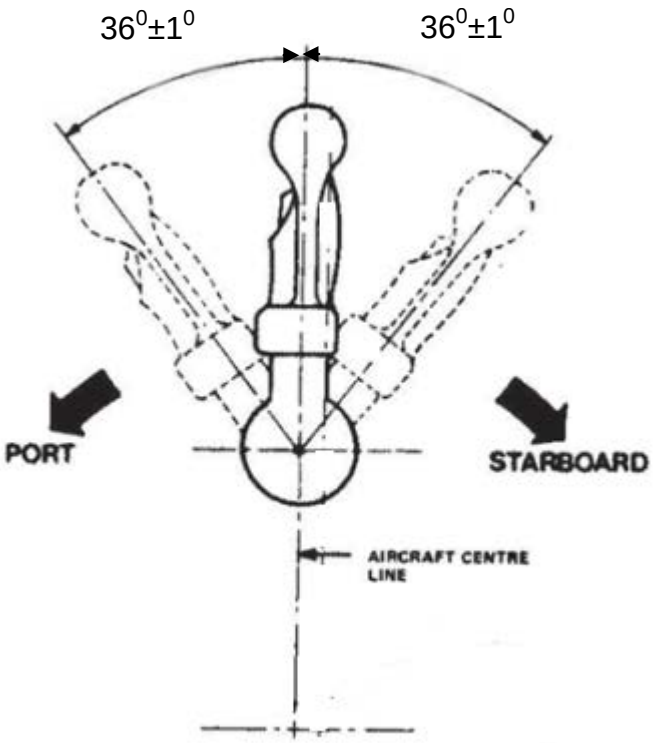

Fig – 5: Control Column travel in Roll

No.	Roll control column displacement (deg)	Force (daN)
1	-36	6
2	-30	4.7
3	-15	3
4	-3	1
5	0	0
6	3	1
7	15	3
8	30	4.7
9	36	6

Table 3**:** Roll control Feel Values

This document is the property of Hindustan Aeronautics Limited and should not be reproduced or communicated without written authorization

5.2. Rudder Pedals

The rudder pedals for yaw control are shown in Fig-6. Rudder flight control is powered control system. To accommodate for the varying pilot leg lengths, the rudder pedal position can be altered by means of a rudder pedal adjuster. Rudder pedal adjustment shall be 228.6 mm. Once the adjustment is done, the rudder pedal linear travel shall be 165 mm (either side of neutral : 82.5 mm) and Rudder pedal travel is as shown in Fig-7. Artificial feel is proportional to the displacement of the pedal from neutral as per Table- 4. The initial break out force to move the rudder pedal is approximately 10.3 daN.

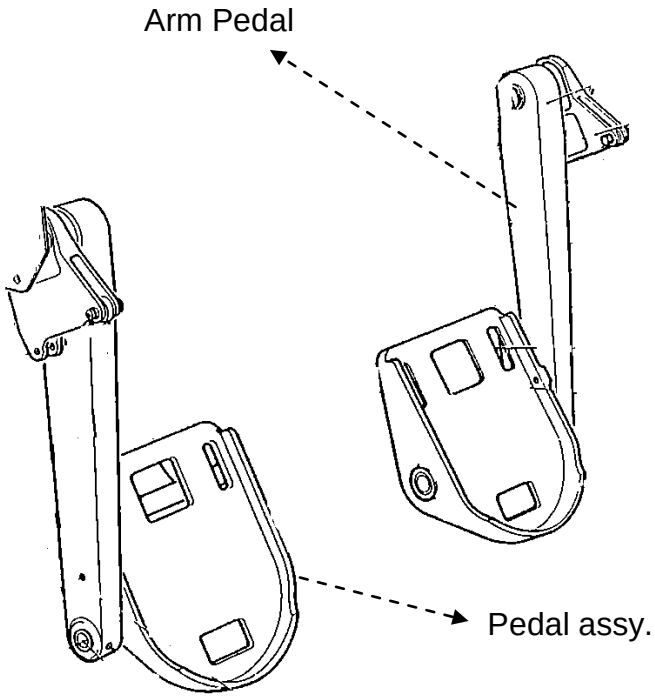

Fig.6: Rudder Pedals

No.	Rudder pedal (mm)	Force (daN)
1	Maximum Movement of rudder in either side of neutral : 82.5 mm	42

Table 4: Rudder Pedal control Feel Values

This document is the property of Hindustan Aeronautics Limited and should not be reproduced or communicated without written authorization

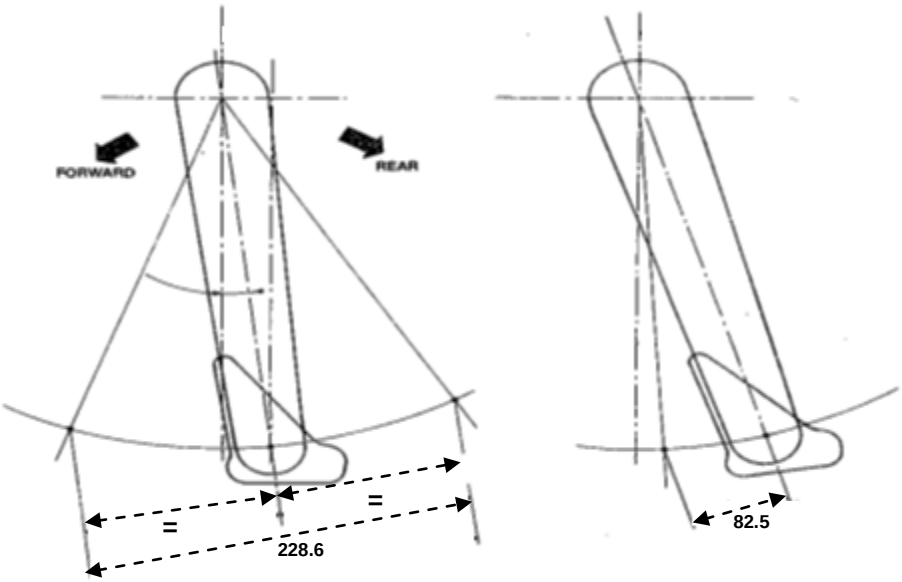

Fig.7: Rudder Pedals travel

This document is the property of Hindustan Aeronautics Limited and should not be reproduced or communicated without written authorization

5.3. Details of other controls

The details of the other Controls of the Jaguar aircraft are given in Table-5.

No.	ITEM	DETAILS
1	Rate stabilization	The function of the rate stabilizer is to increase the natural stability of the aircraft about the pitch, yaw and roll axes. The consequential movements of the control surfaces improve the aircraft reactions to damp out oscillations by diminishing the rates about all three axes; this effect is not fed back to the control column or rudder pedals.
2	Trim mechanism	A spring box associated with an electrical trim actuator is incorporated in three (pitch, roll, yaw) control run. The box provides the pilot with artificial feel during manoeuvres and centres the control to a trimmed position. By using the trim actuator, the pilot can change the trimmed position and select a control position to give zero control force
3	Autopilot	Autopilot is interfaced with the pitch and roll trim systems of the aircraft. The automatic trim in pitch and roll is activated at autopilot engagement. The autopilot ensures the following functions: • Automatically sends commands to aircraft control surfaces on Pitch and Roll axis, • Automatically sends commands to trim the aircraft in pitch and roll axis.

Table-5: Details of Other controls

6. CLS Specification

The active digital electric control loading system (CLS) is required for providing force feel in all three axes, namely pitch axis, roll axis and yaw axis as per the Jaguar aircraft Flight control system as defined in section 4 and 5 of this document.

This document is the property of Hindustan Aeronautics Limited and should not be reproduced or communicated without written authorization

7. CLS Architecture

The required Architecture for the Active Control Loading System is provided in fig -8.

Note: The contents indicated inside the dotted line are vendor's scope of supply.

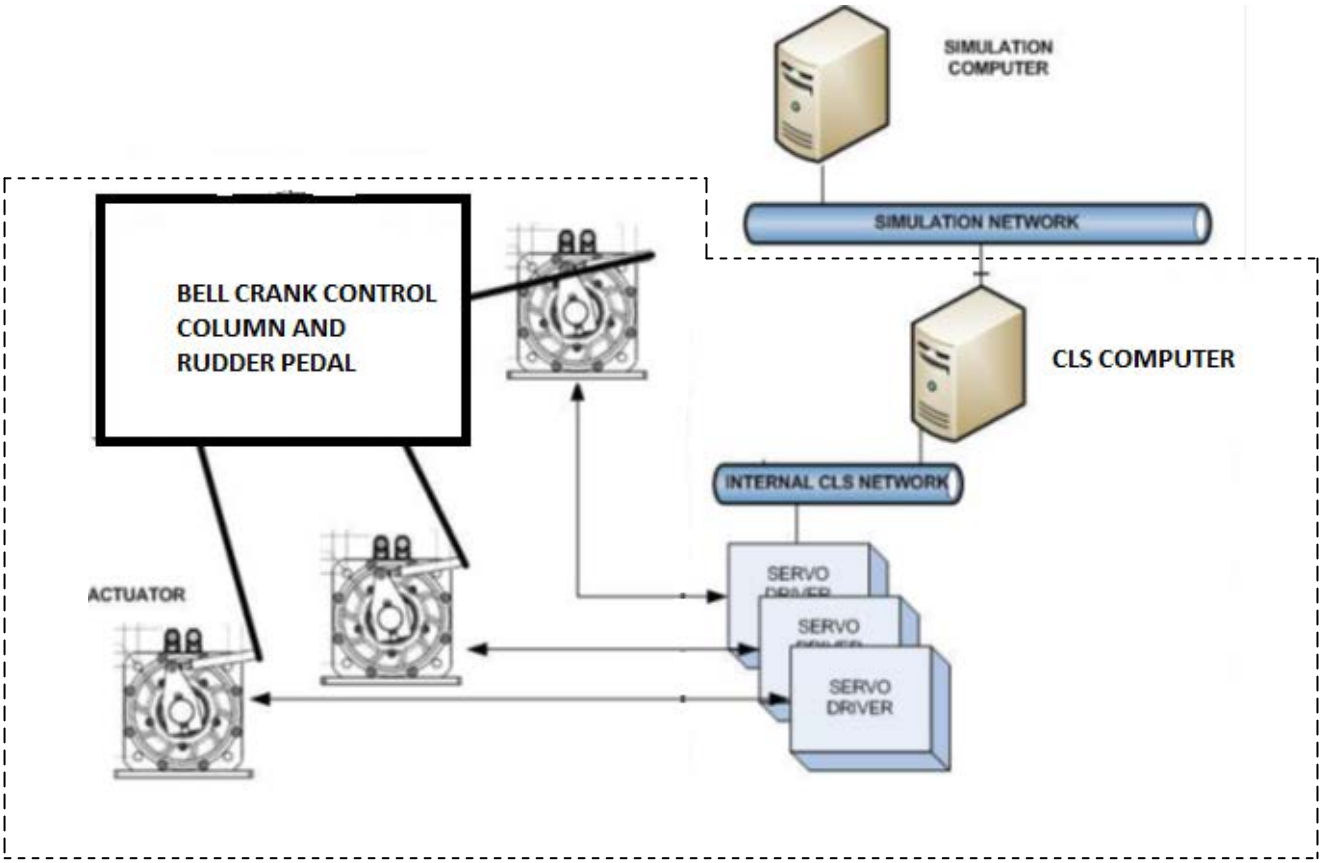

Fig.8: CLS Architecture

8. CLS Hardware Requirements

Vendor shall supply following hardware items as part of the Active Control Loading System (CLS).

a) Mechanical Linkage System with suitable mounting system

The Mechanical linkage system shall transfer load from the control loader actuator to the cockpit flight controls to emulate in-flight forces. Primary flight controls shall be connected to control loader actuator through linkages including attachment frames, Bell crank levers and brackets. All the linkages as well as mounting of the control loader actuator shall be made rigid, so as to minimize elastic deflection.

This document is the property of Hindustan Aeronautics Limited and should not be reproduced or communicated without written authorization

The mechanical linkages must be designed for high stiffness, minimal friction and optimal gearing.

Note:

1) The control column assembly along with link rod as shown in fig. 3 will be integrated on the cockpit shell in the same position as in the actual aircraft by HAL. Vendor to fabricate the other required Bell crank levers, attachments, link rods etc., required for the control loading system and integrate & install the same on cockpit shell at HAL, Bangalore.
2) LH & RH Pedal assemblies as shown in fig.6 will be integrated on the cockpit shell in the same position as in the actual aircraft by HAL. Vendor to fabricate the other required levers, attachments, link rods etc., required for the control loading system and integrate & install the same on cockpit shell at HAL, Bangalore.
3) All necessary fasteners, tools and equipment required for integration of CLS with the cockpit controls shall be the responsibility of the vendor.

b) Control loader actuators

The control loader actuators shall be rotary actuators and shall transfer forces and moments through linkages to the control stick and pedals. The control loader actuators shall be COTS based standard electric servomotors in all three axes.

Specification of Control Loader Actuator:

1. Torque (Continuous) : 150 Nm or more
2. Torque (Peak) : 230 Nm or more
3. Stroke : +/- 45 degree or more
4. Velocity : 580 degree /sec or more

Same actuator model shall be used in all three channels.

c) Servo Drive unit

Each control loader actuator shall be driven by a dedicated servo drive unit.

This document is the property of Hindustan Aeronautics Limited and should not be reproduced or communicated without written authorization

d) CLS Computer

1. Vendor shall supply one CLS computer for running CLS software in real time.
2. Computer supplied shall have Ethernet interface for networking with the host computer / Flight Model.
3. A detailed Ethernet Interface Control Document (ICD) between CLS computer and Simulation Host / Flight Model shall be defined and mutually agreed by HAL and the vendor during the design phase.
4. Vendor shall provide the required software in suitable media to enable HAL / end user to independently re-install the software to new CLS computer in case of any un-serviceability of CLS computer. Vendor shall support transfer of licenses to a new CLS computer without any additional cost
5. All the software licenses supplied shall be perpetual licenses.

e) Power supply Unit

A dedicated power supply unit shall be provided for servo drive units, control loader actuators and other CLS components.

f) Rack

Rack shall be provided to house the CLS computer, Electrical and electronic components of the CLS with the following requirements.

- All Connectors shall be accessible and easy to connect / disconnect,
- All Connectors and cable looms must have a neat appearance, and must not impede user or maintenance access to the control loading system.
- All cables shall be clearly marked with a unique reference, which shall allow relation of each cable with the supporting documentation.
- The Rack shall permit easy access to all components housed inside.

This document is the property of Hindustan Aeronautics Limited and should not be reproduced or communicated without written authorization

9. CLS Software requirements

Vendor shall supply the following software's.

a) CLS software

CLS software shall be type specific to Jaguar aircraft. The CLS software shall compute the expected forces based on the flight control position and flight parameters received from Host computer in Real time. Further, measured control stick position and pedal position shall be sent to host computer through Ethernet.

b) Maintenance utility Software

This software shall enable all CLS control & monitoring functions, configuration/ tuning of CLS parameters in each axis. The Maintenance utility software shall be installed in CLS computer or separate computer, which needs to be provided by vendor. A LCD monitor (minimum 15 Inch size) shall be provided to operate the maintenance utility software.

10. Power Supply

a) The computer workstations & monitors and other electronic equipment of CLS should be capable of running on commercial power supply 230V – Single phase / 415 V 3 phase (± 10%), Frequency 50 - 60 Hz.

b) Power distribution of CLS and supply of associated equipment like power distribution boards for connecting actuators, computer and other electronic equipment is vendor's responsibility.

11. Measurements on Jaguar aircraft

HAL will share the available Jaguar Aircraft Documents on primary flight controls after placement of Purchase order. Further, if required, HAL can provide the vendor to access the powered aircraft on ground for measurement of forces and displacement of aircraft controls after placement of purchase order. Vendor need to arrange the necessary tools required to carry out measurement at HAL, Bengaluru.

This document is the property of Hindustan Aeronautics Limited and should not be reproduced or communicated without written authorization

12. Operating Conditions

All the equipment supplied by the vendor should work without any performance degradation under the following operating conditions:

Operating Conditions:

i. Temperature: 15^0 C to 30^0 C

ii. Relative Humidity: 35% to 60%

Vendor to provide the OEM's data sheets / catalogues, COC and any other relevant documents where in the above operating conditions are mentioned for acceptance.

13. Storage Conditions

All the equipment supplied by the vendor should work without any performance degradation under the following Storage conditions:

i. Temperature: -10^0 C to $+55^0$ C

ii. Humidity: 90% RH at $+40^0$ C

Vendor to provide the OEM's data sheets / catalogues, COC and any other relevant documents where in the above storage conditions are mentioned for acceptance.

14. Other Requirements

a) The vendor shall integrate the CLS with the flight controls viz., control column and rudder pedal. Details of control column assembly and Rudder pedal along with its location in cockpit will be provided in 3D model (IGES format) after placement of PO.
b) The attachment brackets/levers and linkages should be positioned below the cockpit floor in such a manner that integration and maintenance can be carried out without lifting of the cockpit shell.
c) CLS shall provide Trim operation in all three axes and activation of automatic trim in roll and pitch axis at autopilot engagement.
d) Self-Alignment: CLS shall have the ability for self-alignment and resetting the cockpit controls to neutral positions.
e) Vendor to provide the CLS integration requirements in the cockpit shell during design phase so as to enable the cockpit shell manufacturer to accommodate the same in the cockpit shell.
f) Automatic Fault Detection: Control Loading System shall have the ability to detect faults during its operation.

This document is the property of Hindustan Aeronautics Limited and should not be reproduced or communicated without written authorization

g) Adequate safety mechanism to be provided for safety of the trainee pilot. Safety systems for Control Loading System and its accessories to be supplied.

h) Vendor shall develop and supply to HAL a complete layout design in 3D model (IGES/STP format) indicating the details of linkages, levers & attachment brackets etc. from pilot controls to the control loading system during design phase.

This document is the property of Hindustan Aeronautics Limited and should not be reproduced or communicated without written authorization

Part of Encl-1 of RFQ No:MC/S461/1744/22/1

GENERAL REQUIREMENTS
OF
CONTROL LOADING SYSTEM (CLS)
FOR
FIXED BASE FULL MISSION SIMULATOR (FBFMS)
OF
JAGUAR AIRCRAFT

Document No : MCSRDC/JSIM/GR/CLS/02/00

Date : 6th Dec., 2021

Hindustan Aeronautics Limited

Mission and Combat System Research and Design Centre

Bengaluru – 560 017

©Hindustan Aeronautics Limited, MCSRDC, 2021

This document contains proprietary information of Hindustan Aeronautics Limited. This document is confidential and must not be reproduced, copied, disclosed or utilized in any way without prior written permission from Hindustan Aeronautics Limited. This should be used only for intended purpose.

Table of Contents

1.0 Vendor Qualification Criteria 3
2.0 Other Requirements 3
2.1. Delivery Location and Installation Requirements 3
2.2. Standalone Testing, Integration Testing and Acceptance 3
2.2.1. Standalone Testing 3
2.2.2. Integration Testing 4
2.2.3. Acceptance 4
2.3. Factory Acceptance Test (FAT) 4
2.4. Site Acceptance Test (SAT) 4
2.5. Training 5
3.0 List of deliverables 5
4.0 Delivery and Program Schedule: 7
5.0 Warranty 8
6.0 Documentation 8
7.0 Product Support 9
8.0 Design Review and Progress Review Meetings 9
9.0 Quality Management System (QMS) Requirements 9
10.0 Endurance 9
11.0 Year of Production 9
12.0 Spares 10
13.0 Government Regulations 10
14.0 Obsolescence Management 10
15.0 Repeat Order 10
16.0 Submission of Proposal 11

This document is the property of Hindustan Aeronautics Limited and should not be reproduced or communicated without written authorization

1.0 Vendor Qualification Criteria

a) Vendor should have developed, installed, integrated and obtained customer acceptance for at least one 3-Channel (Pitch, Roll and Yaw) Control loading system (CLS) for Flight simulator applications. Vendor should have supplied the subject CLS to simulator manufacturers or simulator end users across the world.

b) Indian vendors who have not carried out all the CLS activities as mentioned at Para.(a) and intend to submit the response to this RFP, should have at least carried out installation and integration of one 3-Channel (Pitch, Roll and Yaw) control loading system by themselves for Flight simulator applications.

c) To support the above claim at (a) or (b) as applicable, vendor shall provide documentary evidences viz. Purchase Order or Certificate of Completion or other equivalent documents along with the bid.

d) If any Indian vendor is having collaboration for supply of Control Loading System, the bid should accompany a formal letter from collaborator stating that the collaborator will ensure quality and performance of the product as well as warranty and full product support.

The above requirements are mandatory requirements and offers not meeting these requirements shall be summarily rejected.

2.0 Other Requirements

2.1. Delivery Location and Installation Requirements

a) Vendor shall deliver the Control loading System at HAL, Bengaluru as per the delivery schedule mentioned at Para 4.0 of this document.
b) Vendor shall carry-out installation of Control loading System in simulator cockpit at HAL, Bengaluru.
c) Arrangement of all the equipment / tools required for installation at HAL, Bengaluru is the responsibility of the vendor.

2.2. Standalone Testing, Integration Testing and Acceptance

2.2.1. Standalone Testing

a) After installation Control Loading System in simulator cockpit, standalone testing of CLS shall be carried out by vendor at HAL, Bengaluru.

b) Vendor is required to provide acceptance test procedures for standalone testing of CLS at HAL, Bengaluru. The test procedures shall be mutually agreed by the HAL and Vendor. Vendor shall ensure the performance of CLS as per the technical requirements mentioned in document no. MCSRDC/JSIM-DIII/TR/CLS/02/00.

This document is the property of Hindustan Aeronautics Limited and should not be reproduced or communicated without written authorization

c) Arrangement of all the hardware & software testing tools required for standalone testing and demonstration at HAL, Bengaluru is the responsibility of the vendor.

2.2.2. Integration Testing

a) After completion of standalone testing, Vendor shall carry out integration of Control loading System with Simulation Host and other subsystems of FBFMS, e.g. Aero model as per the defined ICD.

b) Vendor is required to provide acceptance test procedures for integration testing of CLS at HAL, Bengaluru. The test procedures shall be mutually agreed by the HAL and Vendor. Vendor shall ensure the performance of CLS as per the technical requirements mentioned in document no. MCSRDC/JSIM-DIII/TR/CLS/02/00. Vendor shall resolve the issues if any (related to vendor's scope of work) noticed during the said integration.

2.2.3. Acceptance

Acceptance of the control loading system shall be based on the following:

(i). Satisfactory completion of standalone testing of Control loading system.

(ii). Satisfactory completion of integration testing of Control Loading System with FBFMS.

2.3. Factory Acceptance Test (FAT)

Factory Acceptance Test (FAT) of complete simulator shall be carried out at HAL, Bengaluru by the end user. During FAT, the end user pilot shall qualitatively & quantitatively test FBFMS for complete flight envelope and mission profile of the Jaguar Aircraft. Vendor shall take-up necessary modifications to close all the observations (related to vendor's scope of work) noticed during the FAT.

2.4. Site Acceptance Test (SAT)

a) After successful completion of FAT at HAL, Bengaluru, the simulator along with control loading system will be shipped to end user site by HAL. The dismantling of CLS items for shipment shall be carried out by HAL. Vendor to provide the procedure and necessary support for dismantling.

b) Vendor is required to integrate the dismantled items of the control loading system in simulator at respective end user site.

c) SAT of simulator will be carried out by the end user at end user sites. Vendor is required to participate in the SAT to take-up necessary modifications to close all the observations (related to vendor's scope of work) noticed during SAT. Vendor shall be responsible for getting the control loading system accepted by end user.

RESTRICTED
This document is the property of Hindustan Aeronautics Limited and should not be reproduced or communicated without written authorization

d) Arrangement of all the hardware & software testing tools required if any during SAT at end user sites is the responsibility of the vendor.

e) The end user sites are located in north and western part of India and are approximately 2000 Kms away from Bengaluru, India by road and the end user of the simulator is Indian Air Force.

2.5. Training

Vendor is required to provide operations and maintenance training to HAL personnel at HAL, Bengaluru after the acceptance (as per Para 2.2.3) of 1st set of Control Loading System. The duration of training shall be for a period of 03 days for 05 participants. Training aids should include training notes & PPTs.

The training shall cover the following aspects of Control loading System:

i. Operation and Usage of Control loading system.

ii. Configuration / tuning of CLS parameters

iii. Maintenance, testing and diagnostics of the hardware and software including installation of software.

iv. The training shall include theoretical and hands-on practical training to achieve proficiency on O-level maintenance of the equipment.

v. Vendor shall provide hardcopy of training notes to all the participants.

3.0 List of deliverables

Following are the list of deliverables in terms of supplies and services of Control loading system

Table-1 List of Deliverables

Sl.no.	Item Description	Unit	Quantity
1	Three Axes Control loading system with Control Loader Actuators, servo drives, Power supply module, Rack, interface electronics, interconnecting cables, and its accessories	Set	2
2	CLS computer along with CLS software, Maintenance utility Software, LCD monitor (minimum 15 Inch size). CLS software in suitable media.	Set	2
3	Mechanical Linkages with suitable mounting system	Set	2
4	Documentation (Refer Para 6.0)	Set	2
5	Spares (Refer Para 12.0).	Set	2

RESTRICTED
This document is the property of Hindustan Aeronautics Limited and should not be reproduced or communicated without written authorization

6	Services towards the following: a) At HAL, Bengaluru: 1. Installation and Standalone Testing, Integration Testing of control loading system with simulation host and other sub-system of FBFMS. 2. Take-up necessary modifications to close all the observations (related to vendor's scope of work) noticed during FAT. b) At End User Sites: 1. Reinstallation and integration of control loading system with Flight simulator. 2. Participation in the SAT to take-up necessary modifications to close all the observations (related to vendor's scope of work) noticed during SAT.	Nos	2

RESTRICTED
This document is the property of Hindustan Aeronautics Limited and should not be reproduced or communicated without written authorization

4.0 Delivery and Program Schedule:

The delivery timelines with respect to control loading system are given below. Vendor is required to strictly comply with the time lines.

Table-2: Delivery Schedule

S/N.	Control Loading System Activities	Time line
1	Preliminary Design Review (PDR)	T_0+1 Months
2	Critical Design Review (CDR)	T_0+3 Months
3	Delivery of 1st set of control loading system along with 1st set of spares at HAL, Bengaluru.	T_0 + 10 Months
4	Installation, completion of standalone testing and Integration testing of 1st Set of control loading system at HAL, Bengaluru and Training	T_0 + 11 Months
5	Completion of Factory Acceptance Test (FAT) and rectification of observations specific to vendor Scope of Work (if any) noticed during FAT of 1st FBFMS at HAL, Bangalore	T_0 + 20 Months
6	Completion of Site Acceptance Test (SAT) and rectification of observations specific to vendor Scope of Work (if any) noticed during SAT of 1st FBFMS at Site1	T_0 + 23 Months
7	Delivery of 2nd set of control loading system along with 2nd set of spares at HAL, Bengaluru.	T_0 + 22 Months
8	Installation and completion of standalone testing and Integration testing of 2nd Set of Control Loading System at HAL, Bengaluru	T_0 + 23 Months
9	Completion of Factory Acceptance Test (FAT) and rectifiction of observations specific to vendor Scope of Work (if any) noticed during Factory Acceptance Testing of 2nd FBFMS HAL, Bangalore	T_0 + 29 Months
10	Completion of Site Acceptance Test (SAT) and rectifiction of observations specific to vendor Scope of Work (if any) noticed during Site Acceptance Testing of 2nd FBFMS at Site 2	T_0 + 32 Months

Note 1: T_0 : Date of placement of Purchase Order

Note 2: The items should be supplied as per the delivery schedule indicated above. As time is the essence of this programme for integration of control loading system on simulator, deviations from the schedules will not be acceptable to HAL and may render the bid submitted by the vendor liable to be rejected.

This document is the property of Hindustan Aeronautics Limited and should not be reproduced or communicated without written authorization

5.0 Warranty

i. The each control loading System supplied by the vendor shall carry onsite warranty for 24 months from the date of acceptance by HAL as per Para No. 2.2.3.

ii. The vendor shall warrant that the Control Loading System shall confirm to the technical specifications and shall perform according to the said technical specifications. Any technical changes or modifications or any repair or replacement or maintenance arising during warranty period to meet the technical specifications shall be done free of cost by the vendor. The Control Loading System and associated accessories supplied shall be free from defects in materials & workmanship and fit for the intended purpose.

iii. Vendor shall ensure that the annual cumulative downtime period for the Control Loading system and associated accessories does not exceed 10% of the warranty period. Warranty of the Control loading system would be extended by such duration of downtime. Record of the down time would be maintained by user in log book.

iv. Vendor shall either repair or replace the faulty item during warranty period to meet the uptime requirement as per Para iii mentioned above. Vendor shall put all the efforts to provide the warranty services on highest priority to meet the uptime requirement as & when defect is notified to the vendor.

6.0 Documentation

Two hard copies & two soft copies (DVD) of the following documents for the Scope of Work are to be supplied for each set of CLS:

a. User Handbook / Operating manual.
b. Technical specifications, including interfaces of the Control Loading System, software ICD etc,.
c. Electrical drawings including pin details of interconnecting cables.
d. Mechanical drawings covering sub-assembly, assembly and installation.
e. Maintenance Manuals covering installation procedure along with tools, maintenance, troubleshooting and parts replacement.
f. Bill of Material (BOM).
g. Mutually agreed Stand alone and Integration Test Procedures along with Acceptance Test Report (ATR).
h. Training material.
i. Certification of Compliance (COC), Datasheets and Serviceability tags for CLS.
j. Vendor documents supplied by the third party vendor, if any.

RESTRICTED
This document is the property of Hindustan Aeronautics Limited and should not be reproduced or communicated without written authorization

7.0 Product Support

Vendor shall provide product support for a minimum period of 20 years with regard to necessary spares, consumables and services. In case of obsolescence of products / sub systems / components, the same has to be communicated to HAL in regular intervals for necessary action by HAL. Even after the said mandatory period, vendor would be bound to give at least two years notice to the HAL/end user prior to closing the production line so as to enable a Life Time Buy of all spares before closure of the said production line. All upgrades and modifications carried out on the equipment during its lifecycle must be intimated to HAL.

8.0 Design Review and Progress Review Meetings

Vendor should participate in the Preliminary Design Review (PDR), Critical Design Review (CDR) and Progress Review meetings through video conference that would be planned for design and development of control loading system.

9.0 Quality Management System (QMS) Requirements

Vendor shall have Quality Management System (ISO 9001) or Aerospace AS9100 certification / approval and required to submit the copy of the same along with the technical offer.

10.0 Endurance

The control loading system shall be capable of undertaking daily operation of 10 hrs/ day continuously. Endurance test of Control Loading System for 10 hours shall be carried out during FAT.

11.0 Year of Production

The equipment should be latest manufactured items at the time of delivery

This document is the property of Hindustan Aeronautics Limited and should not be reproduced or communicated without written authorization

12.0 Spares

Following mandatory spares shall be delivered by the vendor along with respective set of control loading system:

Table-3: Spares

S/N	Item Description	Qty required for first set of control loading system	Qty required for second set of control loading system
1	Control loader actuator	2	1
2	One Channel servo drive	2	1
3	CLS computer	2	1
4	Power supply module	2	1
5	Rack spares covering fuses, circuit breakers	2 Set	1 Set
6	Cable set	2 set	1 set
7	Input / output module set	2 set	1 set
8	Safety mechanism / Relay	2	1

It is mandatory to provide line item wise cost for each line item given in Table-3 in the commercial bid.

13.0 Government Regulations

Vendor is required to confirm that there are no Government restrictions or limitations in the country of the supplier or countries from which sub-components are being procured and / or for the export of any part of the system being supplied.

14.0 Obsolescence Management

In case of obsolescence of any item / spare parts / assemblies, vendor shall provide an alternate solution/equivalent item readily available in the market. The vendor shall continue to support the control loading system for a minimum period of 20 years by making available spare parts and assemblies of control loading system.

15.0 Repeat Order

In the event of placement of purchase order, HAL reserves the right to place repeat order for the same items by any of its divisions within 12 months from the date of completion of the original order. The repeat order may be placed up to 100% of the value of the original order either by single order or multiple orders totaling to 100% value of the original order. The prices, terms and conditions of the repeat order shall be same as that of the original order.

This document is the property of Hindustan Aeronautics Limited and should not be reproduced or communicated without written authorization

16.0 Submission of Proposal

Vendor shall provide the following documents/details along with the Technical bid:

(i). Technical description and details of the proposed control loading system.

(ii). Para wise compliance table with respect to technical and general requirements of control loading system along with relevant technical details or datasheets to support the compliance.

(iii). Response to each requirement shall contain adequate details in the technical proposal submitted by the vendor for compliance verification instead of merely stating “Complied”.

(iv). Company ISO 9001 or Aerospace AS9100 certification / approval.

RESTRICTED
This document is the property of Hindustan Aeronautics Limited and should not be reproduced or communicated without written authorization

ANNEXURE-3

Mission & Combat System Research & Design Centre
HINDUSTAN AERONAUTICS LIMITED
Vimanapura Post
Bangalore - 560 017 INDIA

Commercial Bid (PRICE FORMAT)

Tender Ref. No.: **MC/S461/1744/22/1**

Type of Bid: **Two Bid System**

Name of Work: Supply of 3 axis Control Loading System (CLS), System Installation, Integration and Testing

Name of the Vendor/Firm	
Quotation Ref. No.:	

Sl.No.	Part Description (As per Technical requirement document placed at Encl-1)	Qty (UOM)	HSN/SAC Code	Currency	Basic Unit Cost	Total (Basic Unit Cost X Qty.)
1	Supply of 3 axis Control Loading System (CLS), System Installation, Integration and Testing at HAL Bengaluru and at user site (As per Technical Specification requirement document placed at Encl-1)	2 Sets				
2	NRC charges for design and development (As per Technical Specification requirement document placed at Encl-1)	1 Job				
3	Spares for First set of Control Loading System (CLS)	1 Set				
4	Spares for Second set of Control Loading System	1 Set				
Total Basic Cost						
Total Basic Cost (In words)						

L-1 (Lowest Bid) will be decided based on Package wise basis inclusive of all Taxes and Duties

Please indicate the Price Breakup of Spares in Sheet-2

	Type of Tax	Prevailing Rates in %	Applicable on
Please indicate applicable taxes	Basic Custom Duty (if any)		
	IGST on Import (If any)		
	CGST		
	SGST		
	IGST		
Value of Import content involved in your Quote (In case of Indian Supplier)			
EXCHANGE RATE ADOPTED (Indicate Currency and Exchange Rate) (In case of Indian Supplier)			

OTHER INFORMATION, IF ANY

Mission & Combat System Research & Design Centre
HINDUSTAN AERONAUTICS LIMITED
Vimanapura Post
Bangalore - 560 017 INDIA

Commercial Bid (PRICE FORMAT)-PART-B

Tender Ref. No:MC/S461/1744/22/1

Name of Work:Supply of 3 axis Control Loading System (CLS), System Installation, Integration and Testing

Name of the Vendor/Firm	
Quotation Ref. No.:	

S.N	List of Spares	Qty required for first set of control loading system	Currency	Unit Price per No/Set	Total for for 1st set of control loading system	Qty required for 2nd set of control loading system	Currency	Unit Price per No/Set	Total for for 2nd set of control loading system
1	**Control loader actuator**	2				1			
2	**One Channel servo drive**	2				1			
3	**CLS computer**	2				1			
4	**Power supply module**	2				1			
5	**Rack spares covering fuses, circuit breakers**	2 Set				1 Set			
6	**Cable set**	2 set				1 set			
7	**Input / output module set**	2 set				1 set			
8	**Safety mechanism / Relay**	2				1			

The above rows are completely editable. Please use the above to provide additional information such as break up of prices etc.

HINDUSTAN AERONAUTICS LIMITED
MCSRDC Division
Vimanapura Post
Bangalore - 560 017. INDIA

Commercial Terms and Conditions (For Foreign supplier) of Tender - Part of Technical Bid. Annexure - 2A

Tender Ref. No. MC/S461/1744/22/1

Name of Work: Supply of 3 axis Control Loading System (CLS), System Installation, Integration and Testing

Name of the Vendor/ Firm:	
Quotation Ref. No.:	
Contact No. Contact Person: email ID:	

SL. NO.	HAL RFQ terms & conditions	Vendor Compliance (Complied/ Non -complied)
1	**Price:** The bidder is required to indicate prices against individual items. Prices quoted should be in the currency of the country of supply or any other convertible foreign currency such as USD/GBP/EUR.	
	Price quoted should be net FOB / FCA, export packed / FAS Vessel with no extra charge whatsoever. If Ex-works is accepted by the party, a loading factor of 5% would be added and for FOB/FCA shipments 3% loading factor would be added.	
	Bidder should indicate separately cost of services rendered in India if any.	
	If, for special reasons, bidder prices are Ex-Works or F.O.B. plant, bidder must prepay inland transportation's. Port dues and shipment charges up to F.O.B. vessel at port of shipment and claim this amount of actual along with the price of the goods through bank. Bidder's quotation should indicate clearly the extent of such charges.	
	Tenderers should clearly mention whether the prices hold good when the full quantity of enquiry is not ordered but only a part of it. Unless otherwise mentioned, it would be assumed that the rates hold good even when lesser quantities than those enquired of are ordered. Any increase in prices at a later date for ordering lesser quantities will not be agreed to.	
2	**Taxes :** Bidders has to bear all taxes, duties and levies payable in their country and HAL will bear all statutory levies, other than withholding tax and service tax, payable in India.	
3	**Quantity :** a. The quotation must be in the unit in which the quantity is indicated in the enquiry. If it is otherwise, conversion data must be furnished. b. HAL reserves the right to order quantity less than indicated in the enquiry /quoted for by bidder, at the prices quoted, without any reference to the bidder.	
4	**Supply of Alternative Item** : In case bidder is quoting for an alternative part number it should be confirmed that the offered part is fully interchangeable with the required part. Applicable descriptive literature/catalogue if any may please be enclosed by the bidder with offer (at least two copies).	
5	**Shelf Life :** Where stores offered have a limited shelf-life, kindly indicate the life involved and confirm that in the event of an order from us, only newly manufactured stores with the maximum possible shelf-life at the time of dispatch will be offered for shipment. In respect of rubber items such as seals etc., having care date, the item should not have been manufactured earlier than 6 months of dispatch.	
6	**Validity of the Quotation :** Price quoted should be net and unless otherwise specified should remain valid for our acceptance for a minimum of **120 days** from the closing date of enquiry and the materials of offered should be kept under provisional reservation for this quotation.	
7	**Tender Due Date :** The due date for submission of quote is as indicated in RFQ through e-procurement mode only.	
8	**Submission of Tender : Response to bid through e-Procurement should be uploaded in the e-portal only.** 1. Bidders are requested to submit their proposals (Technical and Price bid) online at HAL's eprocurement portal (http://eproc.hal-india.co.in or link to e-Procurement through www.hal-india.co.in). Tenders submitted through any means other than e-procurement portal will not be considered and will be rejected (No Hard copies of Technical and Price bid should be submitted). 2. Response to bid through e-Procurement should be uploaded in the e-portal only. Bid submitted by bidder's authorized dealer / distributor/channel partner should accompany with ink signed authorization letter of the bidder to whom tender has been originally issued. In the absence of authorization letter, the bids submitted shall be considered an unsolicited. 3. Vendors should ensure the bids are submitted as per RFQ well before due date and time of tender. Vendor may note technical bid should include technical aspects only. If prices are indicated in the technical bid or attached as a part of technical bid even in the form of PDF, the offer will not be considered for evaluation.	
9	**PRE-BID Meeting:** A pre bid meeting has been arranged on 31.01.2022 at MCSRDC Division, HAL , Bangalore at 14.00 PM (IST). All the bidders are invited to attend the meeting in order to understand the requirement and clarify any doubts before submission of bids. All the Interested vendors have to forward the names of attendees for the pre bid meeting to email ID: suresh.patri@hal-india.co. and sanjay.kumar5@hal-india.co.in in latest by 29/01/2022	
10	**Tender Evaluation:**	
	L-1 (Lowest Bid) will be decided based on Package wise basis inclusive of all Taxes and Duties for the Price Bid Annexure 3)	
10.a	**DISCREPANCIES IN THE QUOTATION:** a) where there is a discrepancy in unit rate and total value, the unit rate will be considered for evaluation. b) Where it is not indicated whether the rate quoted is unit rate or Total value, the price indicated shall beconsidered as Unit rate and evaluated accordingly. c) Where there is discrepancy in the amount quoted in words and Figures, the amount in words will be considered for evaluation. d) Where there is discrepancy between the clauses of the laid down terms and conditions and the technical specification, the technical condition shall hold good, valid, final and binding.	
11	Bid with lowest price conforming to the specification will be considered for placement of order. Appropriate loading shall be done on quote prices in case vendors deviate/non-comply with clauses such as Liquidated Damages, SD, PBG, Payment terms. Vendor with lowest price will be considered for placement of order after considering all taxes and charges (i.e., landed price) and after loading (if there is/are deviation(s))	
12	**PURCHASE PREFERENCE POLICY:** In line with Public Procurement (Preference to Make in India), Order 2017 & its amendments issued by Govt. of India & with a view to support the Indian industries, HAL has implemented "Purchase Preference Policy". The "Purchase Preference" is applicable for the "Class-I Local Supplier" for the goods/services/works covered in this tender subject to the Terms & condition of Purchase preference clause as attached at Appendix-A Type-II. Note: (a) The subject item falls under **INDIVISIBLE** category. (b) The offers sought from all suppliers i.e. **Class-I, Class-II Local supplier and Non-local suppliers/ Foreign supplier**). (d) The margin of Purchase Preference shall be up to 20% only for Class-I Local Supplier. The bidders are requested to go through the same & submit the bids accordingly and provide the compliance for the same.	
	Integrity Pact: a) Bidder shall submit duly signed Integrity Pact in original, strictly as per the format (without any deviation) enclosed with the RFQ. Bidders not complying with this are liable for rejection and their bids will not be considered for evaluation. Bidders are advised to view the CVC site for the guidelines issued by CVC on adaptation of integrity Pact	

13	b) In case of two bid system, the bidder is required to submit the signed pre-contract IP as part of technical bid, failing which offers are liable for rejection.	
	Vendor should sign (duly signed by authorized signatory and witness) and submit hard copy of original and signed Integrity Pact as per the format placed at Part-IV of RFQ in a sealed envelope. The envelope should be marked as "Integrity Pact" indicating Tender Reference and due date. The sealed separate envelope (superscribed with tender number& due date) containing the signed Integrity pact should reach **us at the following address on or before the tender due date and time:** Dy. General Manager (IMM)-MCSRDC HAL-MCSRDC Hindustan Aeronautics Ltd. Vimanapura Post, Bangalore-560017	
	c) The Buyer has appointed Independent External Monitors for this Pact in consultation with the Central Vigilance Commission as follows: Shri Rajiv, IPS (Retd.) e-mail: shreerajiv1975@gmail.com Shri Gangaram Aloria, IAS (Retd) email:aloriag@yahoo.co.uk All clarification/query w.r.t tender & request for validity extension of the tender should be forwarded to HAL only and not to the IEM.	
	d) If any complaint with regard to violation of the IP is received by the buyer in a procurement case, the buyer shall refer the complaint to the Independent External Monitors for their comments / enquiry	
	g) If the Independent External Monitors need to peruse the records of the buyer in connection with the complaint sent to them by the buyer, the buyer shall make arrangement for such perusal of records by the Independent External Monitors	
	h) The signed IP will form part of the contract/purchase order, in the event of placement of order	
	i) In case Bidders have submitted signed IP to HAL with any material change / deviations / different format (from HAL's approved format the bids of such bidders will be rejected	
	j) The bidder may approach IEM nominated only for integrity related issues. Bidders may seek clarification on specific tender / RFQ / NIT related queries on-line only from (Contact Person) within the specified period at the following contact details. Address of Division: Dy. General Manager (IMM)-MCSRDC HAL-MCSRDC Hindustan Aeronautics Ltd. Vimanapura Post, Bangalore-560017 Phone No: +91-80-22322747 Contact Person: Sri Patri Suresh Kumar, Mob: +91 8480247367, e-mail: suresh.patri@hal-india.co.in	
14	If two or more bidders quote the same price, HAL reserves the right to seek revised offer from the same bidders and placing order on revised L-1 offer. If same situation prevails then HAL reserve the right to place order on any of them.	
15	Restrictions under Rule 144(xi) of the General Financial Rules (GFRs) issue by GoI, Ministry of Finance, Department of Expenditure (DOE): Any bidder from a country which shares a Land Border with India will be eligible to bid in this tender, ONLY, if the bidder is registered with the Competent Authority (i.e. the registration committee constituted by the Department for Promotion of Industry and Internal Trader (DPIIT). However, the bidders from those countries (even if sharing a land border with India) to which Government of India has extended lines of credit or in which the Government of India is engaged in development projects are not required to register with Competent Authority and will be eligible to bid in this tender. For further details refer tender documents	
	All the participating bidders have to mandatorily submit the relevant certificate as per format attached as ANNEXURE-II A (either Type-I or Type-II), at the time of submiting the Technical bid along with their offer.	
16	Conditional discounts will not be considered in evaluation of tender.	
	In respect of two bid system, technical bid will be opened on the tender opening date. After technical evaluation, the Commercial bids of those bidders who are technically acceptable will be opened.	
17	**Others:** Please indicate approximate net weight of each of the item and gross weight and dimension of the package to enable HAL to determine the mode of dispatch.	
18	Please indicate in your tender, whether stores newly manufactured are offered. Where newly manufactured stores are offered and on inspection it is found that reconditioned stores or parts have been used, such stores will be rejected at the contractor's risk and expense.	
19	Manufacturer's name and country of origin of the materials offered must be clearly specified. Complete details and illustrated literature must accompany all quotations.	
20	Vendors should clearly indicate similar equipment supplied on global basis to Aircraft manufacturing industry, to any Division of HAL and other reputed/Govt customers and anywhere in India with customer's full address, telephone/telefax No., P.O. No., value and year of supply.	
21	HAL is not bound to accept the lowest or any quotation and reserves the right of accepting the whole or any part of the quotation or part of the quantity offered and bidder must supply the same at the rate quoted.	
22	Vendor shall not be entitled without HAL's consent to assign or transfer to a third party all or part of the benefits or obligations under this contract.	
23	**Security Deposit**: a) Successful vendor, shall have to deposit **5% of the value of the order as Security Deposit** (to be calculated only on basic cost excluding taxes & duties, if such details are furnished separately in the bid submitted) within 15 days of receipt of the purchase order, by demand draft or bank guarantee in a prescribed format of H.A.L from a scheduled bank in India / bank of international repute (for Foreign vendors), valid up to 60 days after the completion of contract period/last supply. This Security Deposit will bear no interest and will be returned only after the contract is completed to the entire satisfaction of H.A.L. In case, quotes received without indicating the break-up details of GST and order placed subsequently on composite value (without indicating breakup details of taxes & duties) then the Security deposit to be sought on the composite value (including taxes & duties) **Note - Loading factor of 5% shall be considered during Commercial Evaluation for bidders who have not agreed for submission of Security Deposit**	
	b) In case the contract is not executed to the entire satisfaction of HAL the security deposit shall be forfeited, besides initiation of risk purchase action	
	c) No claim will be entertained against HAL either in respect of interest, if any due on the security deposit or depreciation in value.	
	d) On due performance and completion of the contract in all respects, the security deposit will be returned to the vendor, without any interest, on presentation of absolute "No Demand Certificate" and upon return in good condition of any specifi cations, drawings, samples or any other property belonging to the purchaser, which may have been issued to the vendor.	
24	**Liquidated Damages**: In the event of an order, we reserve the right to collect a sum of 0.5% per week of delay or part thereof, subject to a maximum of 10% as our claim- towards liquidated damages on the undelivered part of the order. **In case of tenderers not agreeing for LD clause, the maximum LD amount / to the extent not agreed LD value, will be loaded in the Comparative Statement, to determine the lowest bidder.**	

25

PERFORMANCE BANK GUARANTEE: Successful bidder (Seller) after placement of order and supply of product, shall provide Performance Bank Guarantee as per HAL's format for 10% of the order value of supplies valid up to end of the warranty period of supplies from a Nationalised Bank/Scheduled bank in India / Bank of International repute (for foreign vendor) or otherwise equivalent amount shall be retained till completion of warranty period or until all the vendor's obligations as per the Purchase Order / contract are fulfilled to the satisfaction of HAL.

Note: In case vendor does not agree for Performance Bank Guarantee / retention of equivalent amount, the offer shall be summarily rejected.

25.a

GUIDE LINES FOR SUBMISSION OF BANK GUARANTEES:

• Bank guarantees should be submitted in the specified formats without any errors, deviations or conditions/riders. Current formats are enclosed. However bidders should comply with prevailing formats and guidelines of HAL with respect to BGs at the time of issue of BGs.
• All Bank Guarantees should be submitted to HAL directly by the issuing Bank under Registered Post (A.D.).
• Bank Guarantee shall be authenticated by Bank's signatory with official seal.
• The name, designation and code numbers of the Bank officer / officers signing the BGs should be incorporated under the signature(s) of the officials signing the BGs.
Bank Guarantee should be issued from a Nationalised / Scheduled Bank in India.

26

Warranty: (Please refer technical requirement document Encl-1)

i. The each control loading System supplied by the vendor shall carry onsite warranty for 24 months from the date of acceptance by HAL as per Para No. 2.2.3.
ii. The vendor shall warrant that the Control Loading System shall confirm to the technical specifications and shall perform according to the said technical specifications. Any technical changes or modifications or any repair or replacement or maintenance arising during warranty period to meet the technical specifications shall be done free of cost by the vendor. The Control Loading System and associated accessories supplied shall be free from defects in materials & workmanship and fit for the intended purpose.
iii. Vendor shall ensure that the annual cumulative downtime period for the Control Loading system and associated accessories does not exceed 10% of the warranty period. Warranty of the Control loading system would be extended by such duration of downtime. Record of the down time would be maintained by user in log book.
iv. Vendor shall either repair or replace the faulty item during warranty period to meet the uptime requirement as per Para iii mentioned above. Vendor shall put all the efforts to provide the warranty services on highest priority to meet the uptime requirement as & when defect is notified to the vendor.

27

Delivery Schedule: (Please refer technical requirement document Encl-1)

The delivery timelines with respect to control loading system are given below.
Vendor is required to strictly comply with the time lines.

Table-2: Delivery Schedule

S/N.	Control Loading System Activities	Time line
1	Preliminary Design Review (PDR)	T_0+1 Months
2	Critical Design Review (CDR)	T_0+3 Months
3	Delivery of 1st set of control loading system along with 1st set of spares at HAL, Bengaluru.	T_0 + 10 Months
4	Installation, completion of standalone testing and Integration testing of 1st Set of control loading system at HAL, Bengaluru and Training	T_0 + 11 Months
5	Completion of Factory Acceptance Test (FAT) and rectification of observations specific to vendor Scope of Work (if any) noticed during FAT of 1st FBFMS at HAL, Bangalore	T_0 + 20 Months
6	Completion of Site Acceptance Test (SAT) and rectification of observations specific to vendor Scope of Work (if any) noticed during SAT of 1st FBFMS at Site1	T_0 + 23 Months
7	Delivery of 2nd set of control loading system along with 2nd set of spares at HAL, Bengaluru.	T_0 + 22 Months
8	Installation and completion of standalone testing and Integration testing of 2nd Set of Control Loading System at HAL, Bengaluru	T_0 + 23 Months
9	Completion of Factory Acceptance Test (FAT) and rectification of observations specific to vendor Scope of Work (if any) noticed during Factory Acceptance Testing of 2nd FBFMS HAL, Bangalore	T_0 + 29 Months
10	Completion of Site Acceptance Test (SAT) and rectification of observations specific to vendor Scope of Work (if any) noticed during Site Acceptance Testing of 2nd FBFMS at Site 2	T_0 + 32 Months

Note 1: T_0 : Date of placement of Purchase Order

Note 2: The items should be supplied as per the delivery schedule indicated above. As time is the essence of this programme for integration of control loading system on simulator, deviations from the schedules will not be acceptable to HAL and may render the bid submitted by the vendor liable to be rejected.

27a.

Repeat Order Requirement:

In the event of placement of purchase order, HAL reserves the right to place repeat order for the same items by any of its Divisions within 12 months from the date of completion of the original order.The repeat order may be placed up to 100% of the value of the original order either by single order or multiple orders totaling to 100% value of the original order. The prices, terms and conditions of the repeat order shall be the same as that of the original order.

28

Terms of Payment: In the event of an order,100% payment of each milestones as indicated below will be made within 30 days from the date of receipt and acceptance each milestone through wire transfer within 30 days from the date of Receipt and acceptance. SWIFT mandate to be provided along with the offer :
T0 : Date of placement of
Purchase Order

Milestone No.	Activity	Time line (in	% Payment
1	Preliminary Design Review (PDR)	T_0+1	5%
2	Critical Design Review (CDR)	T_0+3	5%
3	Delivery of 1st Set of Control loading system along with 1st set of spares at HAL, Bengaluru.	T_0 + 10	25%
4	Installation, completion of standalone testing and Integration testing with FBFMS of 1st Set of Control loading system at HAL, Bengaluru.	T_0 + 11	
5	Completion of Factory Acceptance Test (FAT) and rectifiction of observations specific to vendor Scope of Work (if any) noticed during FAT of 1st FBFMS at HAL, Bangalore	T_0 + 20	5%
6	Completion of Site Acceptance Test (SAT) and rectifiction of observations specific to vendor Scope of Work (if any) noticed during SAT of 1st FBFMS at Site1	T_0 + 23	10%
7	Delivery of 2nd Set of Control loading system along with 2nd set of spares at HAL, Bangalore	T0 + 22	30%
8	Installation and completion of Standalone testing and Integration testing of 2nd Set of control loading system at HAL, Bangalore	T_0 + 23	
9	Completion of Factory Acceptance Test (FAT) and rectifiction of observations specific to vendor Scope of Work (if any) noticed during Factory Acceptance Testing of 2nd FBFMS HAL, Bangalore	T_0 + 29	10%
10	Completion of Site Acceptance Test (SAT) and rectifiction of observations specific to vendor Scope of Work (if any) noticed during Site Acceptance Testing of 2nd FBFMS at Site 2	T_0 + 32	10%

Note 1: T0 : Date of placement of Purchase Order

Note 2: The items should be supplied as per the delivery schedule indicated above. As time is the essence of this programme for integration of control loading system on simulator, deviations from the schedules will not be acceptable to HAL and may render the bid submitted by the vendor liable to be rejected.

	In case bidder offers any other terms of payment and any financing cost which has to be borne by HAL, the same will be taken for commercial evaluation and appropriate loading will be done.	
29	i) In accordance with our standard practice, payment against any order materializing out of your offer, will be against presentation of documents through the State Bank of India, JC Road, Bangalore, India.	
	iii) It will be SWIFT transfer in case of sight draft/open credit payment terms. The bank details including Account No, IBAN No, banker name, Branch, Branch Code, Address, SWIFT code should be indicated in your quotation without fail.	
30	Any order, resulting from the enquiry, shall be governed by the General Terms and Conditions of Contract of HAL and any party quoting against this enquiry shall be deemed to have read and understood these terms and conditions and to have quoted subject to these terms and conditions .	
31	When counter terms and conditions have been offered by a tenderer, HAL shall not be deemed to be governed by such terms and conditions unless specific written acceptance thereof has been given by HAL.	
32	Any terms & conditions which has not been the part of the bid or Purchase Order, if put forward in subsequent correspondence, shall not be considered by HAL.	
33	Disregard of any instructions, may result in your offer being ignored.	
34	Canvassing by tender form, including unsolicited letter on tender submitted or post tender corrections shall render their tenderers liable for rejection.	
35	**BRIBES AND GIFTS** Any bribe, commission, gift or advantage given, promised or offered by or on behalf of the contractor or his parties, agent or servant or any one on his or their behalf to any officer, servant, representative or agent of HAL or any person on his or their behalf in relation to the obtaining or to the execution of this or any other contract with HAL shall in addition to any criminal liability which the contractor may incur, subject the contractor to the cancellation of this and all other contracts with HAL and also to payment of any loss or damage resulting from any such cancellation under clauses-8 and 10 thereof. Any question or dispute as to the commission of any offence under the present clause shall be settled by HAL in such manner and on such evidence or information as they may think fit and sufficient and their decision shall be final and conclusive.	
36	**CONFIDENTIALITY:** For the purpose of this Tender /Contract/ Agreement, the Bidder/Contractor/Supplier shall not store, copy or disclose HAL's data and information whether in written, machine readable or other tangible form or disclosed orally, that is of value to HAL. Also, Bidder /Contractor /Supplier agrees to use HAL's data only for the purpose under this Tender/Contract/ Agreement, restrict disclosure to any other person or entity or third party and shall safeguard the provided data including from cyber security risks etc. Bidder/ Contractor /Supplier should promptly return within 90 days HAL's data in original media and should not keep HAL's data, upon expiry of Tender IContract/ Agreement or early termination of Contract/ Agreement and certify that HAL's data has been deleted permanently. Non-adherence to this confidentiality clause by the Bidder/ Contractor/Supplier shall be treated, as a material breach of this Tender /Contract/ Agreement. The provisions of this clause shall survive and remain in force notwithstanding the termination or expiry of this Contract/ Agreement.	
37	**Intellectual Proprietary Rights (IPR):** In the development orders, where technical inputs/assistance is provided to the vendors, the Intellectual Proprietary Rights (IPR) will rest with HAL. Vendor will not directly deal with HAL's customer for these items.	
38	**INDEMNITY AGAINST PATENT RIGHTS:** Vendor shall confirm HAL that there is no infringement of any patent or industrial or intellectual property rights occasioned by the supply and shall undertake to indemnify HAL against all costs, expenses and claims for damages made by any third party that HAL may incur as a result of any action for infringement for which HAL may become liable for the use by HAL of the supplies, arising from any alleged patent or industrial/ intellectual property rights arising or resulting from any use of the supplies.	
39	**FALL CLAUSE :** The price quoted shall be in no event exceed the lowest price at which you sell the stores or offer to sell stores of identical description to any person(s) / organization including the purchases by any department of the Govt. of India, the State Govt. or any statutory undertaking of the Govt. of India / State Govt., as the case may be during the period till the completion of the performance of the order placed and during currency of the order. If at any time during the said period, the contractor reduces the sales price, sells or offers to sell such stores to any person/organization including the purchaser or any department of Central Govt. or any Dept. of State Govt., or any statutory undertaking of the Central or State Govt., as the case may be at a price lower than the price chargeable under the contract, he shall forthwith notify such reduction/sale or offer to sale to the Hindustan Aeronautics Limited and the price payable under the contract for the stores supplied after the date of coming into force of such reduction or sale or offer to sale shall stand correspondingly reduced.	
40	**Immunity to Government of India:** It is expressly understood and agreed by and between supplier & purchaser that purchaser is entering into this contact solely on its own behalf and not on behalf any other person or entity. In particular, it is expressly understood and agreed that Government of India is not a party to this contract and has no liabilities, obligations or right hereunder. It is expressly understood and agreed that purchaser is an independent legal entity with power and authority to enter into contracts solely on its own behalf under the applicable laws of India and general principles contract law. Supplier expressly agreed acknowledges and understand that purchaser is not an agent, representative or delegate to the Government of India. It is further agreed and understood that Government of India is not and shall not be liable for any acts, omissions, commissions, breaches or other wrongs arising out of the contract. Accordingly, supplier hereby expressly waives releases and foregoes any and all actions,including counterclaims, impleader claims or counter claims against the Government of India arising out of this contract and covenants as to any manner, claim cause or action or this whatsoever arising out of or under this contract.	
41	**JURISDICTION :-** The Court at Bangalore only shall have jurisdiction to deal with and to decide any legal matter whatsoever arising out of this contract.	
42	**INDEMNITY :** The contractor shall at all times indemnify HAL against all claims which may be made in respect of the stores for infringement of any right protected by patent, registration of design or trade mark.	
43	**ARBITRATION :** All disputes or differences whatsoever arising between the parties out of or relating to the construction meaning and operating or effect of this contract or the breach thereof shall be settled by arbitration in accordance with the rules of arbitration of the ICA/ICADR and the award made in pursuance thereof shall be binding on the parties.	
44	**Quality Requirements:** 1.Requirements regarding the need for the supplier to - notify HAL of nonconforming product, - obtain HAL approval for nonconforming product disposition, - notify HAL of changes in product and/or process, changes of suppliers, changes of manufacturing facility location and where required obtain organization approval and - flow down to the supply chain the applicable requirements including customer requirements, 2). Records retention requirements and 3). Right to access by HAL, customer and regulatory authorities to the applicable areas of all facilities at any level of the supply chain, involved in the order and to all applicable records.	
45	Compliance of AS9100D (Please refer Appendix-1)	
46	**Declaration of Non-supply of Counterfeit Products:** The bidder has to comply and categorically indicate that the parts/product supplied is manufactured by OEM or through authorized distributor of OEM. Counterfeit parts/products should never be supplied. At any point if it is found that the part and/or product supplied are found to be counterfeit, penal actions as per company rules and existing laws may be initiated against the vendor.	

47	**Agents / Agency Commission:** The seller confirms and declares to the buyer that the seller is the original manufacturer or authorized distributor / stockiest of original manufacturer or Govt. Sponsored / Designated Export Agencies (applicable in case of countries where domestic laws do not permit direct export by OEMS) of the stores referred to in this offer / contract / Purchase order and has not engaged any individual or firm, whether Indian or Foreign whatsoever, to intercede, facilitate or in any way to recommend to Buyer or any of its functionaries, whether officially or unofficially, to the award of the contract / purchase order to the Seller; nor has any amount been paid, promised or intended to be paid to any such individual or firm in respect of any such intercession, facilitation or recommendation. The Seller agrees that if it is established at any time to the satisfaction of the Buyer that the present declaration is in any way incorrect or if at a later stage it is discovered by the Buyer that the Seller has engaged any such individual / firm, and paid or intended to pay any amount, gift, reward, fees, commission or consideration to such person, party, firm or institution, whether before or after the signing of this contract / purchase order, the Seller will be liable to refund that amount to the Buyer. The Seller will also be debarred from participating in any RFQ / Tender for new projects / program with Buyer for a minimum period of five years. The Buyer will also have a right to consider cancellation of the Contract / Purchase order either wholly or in part, without any entitlement or compensation to the Seller who shall in such event be liable to refund all payments made by the Buyer in terms of the Contract / Purchase order along with interest at the rate of 2% per annum above LIBOR (London Inter Bank Offer Rate) (for foreign vendors) and Base Rate of SBI (State Bank of India) plus 2% (for Indian vendors). The Buyer will also have the right to recover any such amount from any contracts / Purchase order concluded earlier with Buyer.	
48	**RISK PURCHASE:** In the event the SUPPLIER fails to deliver the goods or any consignments thereof within 90 days following the conclusion of the period prescribed for such delivery the PURCHASER may purchase the goods not delivered from the other sources and such a replacement's total cost to HAL upto to a maximum of one hundred and thirty percent of Supplier's price for such item shall be deducted by HAL from the next upcoming payment or payments to be made to Supplier under the contract	
49	**Short-Closure of Contract:**HAL reserve the right to short-close this contract with prior notice to the vendor at any time during the tenure of the contract. The liability of HAL in this case will be limited to the extent of the cost as assessed by HAL in its opinion, incurred by vendor till the point of termination of contract. However in any case, the maximum liability of HAL is limited to order value to the extent of short closed quantities.	
50	**TERMINATION OF CONTRACT:** In case of breach of contract, aggrieved party shall advise in writing to other regarding specific terms of contract which has been breached and will provide reasonable opportunity to improve upon within a specific time period, failing which the aggrieved party have the right to terminate the contract with prior notice	
51	**Sub- Contracting:** Tenderer shall not be entitled to sub contract the obligations of the tenderer without HAL's written consent. In pursuance of any merger/demerger, consolidation or re-organization or voluntary sale or transfer of all or substantially all the party's assets where the merged, consolidated or re-organized corporation or entity or agency resulting there from or the transferee of such sale or transfer has the authority and power and agreed to effectively perform the obligations under this contract. In such an eventuality, due notice shall be given to the other party in writing.	
52	New Firm (Non Registered vendor): Indicate in your quotation, whether you are a registered vendor of HAL and if so by which division of HAL. If you are not a registered vendor of HAL, submit the application for Registration by HAL by downloading application format from our website www.hal-india.co.in with necessary documents. The supplier registration application with relevant documents needs to be submitted by selected bidder to HAL before placement of purchase order. Please note that HAL will not place order on Non Registered Vendors.	
53	**Appropriation:** Whenever under this Contract any sum of money is recoverable from any sum of payable by the Supplier, HAL shall be entitled to recover such sum by appropriating in part or whole by deducting any sum then due or which at any time thereafter may become due to Supplier in this or any other Contract entered by HAL as a whole or its divisions and branch offices etc. held by him alone or in partnership with others. If this sum is not sufficient to cover the full amount recoverable, the Supplier shall pay to HAL on demand the remaining balance due.	
54	**EXIT CRITERIA:** i. The contract/order may be terminated under the following circumstances: a. In the event of unsatisfactory performance by the vendor during the contract period, or any of the information provided by the supplier is found to be untrue, or supplier is found to have attempted to influence any person involved with the contract through unethical means, the contract shall be terminated with 6 month's advance notice without any financial implication to HAL. Notwithstanding the foregoing, in cases where it is found that a supplier is engaged in unethical practices, the same shall be barred from participating in the future contracts for a period of 2 years. b. If there is change in the Customer requirement, contract shall be terminated with 6 month's advance notice. The liability of HAL in this case will be agreed mutually. c. The supplier is declared bankrupt or becomes insolvent. d. The delivery of material is delayed due to causes of Force Majeure by more than 6 months. e. Based on the decision of the Arbitration Tribunal. ii. In the event of termination of contract by either party the supplier shall ensure the following: a. IPRs are transferred to HAL to enable HAL to proceed on the work with other suppliers. Suppliers also will render all assistance till the other suppliers fully take over the balance work. b. Transfer title and deliver all or any part thereof of the supplies, materials, work-in-process, finished Products, Tooling, drawings and data produced or acquired by vendor specifically for the Product being terminated. c. Supplier shall ensure supply of products and its components /Spares at least for a period of 2 years from the date of such termination".	
55	Please indicate the address, contact details, email ID for future correspondence / clarifications and also provide email and phone no of CEO/MD/GM/Proprietor	

Mission & Combat System Research & Design Centre
HINDUSTAN AERONAUTICS LIMITED
Vimanapura Post
Bangalore - 560 017 INDIA

Public Procurement (Preference to Make in India) - Part of Technical Bid.
Appendix-A

Tender Ref. No.: MC/S461/1744/22/1

Name of Work : Supply of 3 axis Control Loading System (CLS), System Installation, Integration and Testing

Name of the Vendor/ Firm:	
Quotation Ref. No.:	

PLEASE INDICATE YOUR RESPONSE/ COMPLAINCE/ ACCEPTANCE TO THE FOLLOWING TERMS (MANDATORY) AND UPLOAD AS A PART OF TECHNICAL BID

SL. NO.	HAL RFQ terms & conditions	Vendor Compliance (Complied/ Non -complied)
1	In line with Public Procurement (Preference to Make in India), Order 2017 & its various amendments issued by Govt. of India from time to time & with a view to support the Indian industries, HAL has implemented "Purchase Preference Policy". The "Purchase Preference" is applicable for the "Class-I Local Supplier" for the goods/services/works covered in this tender subject to the following terms & conditions:	
Note	(a) The subject item falls under **indivisible** category (indicate divisible/ indivisible).	
	(b) The offers sought only from **Class-I, Class-II Local supplier, Non-local suppliers/ foreign supplier**	
1	1. **Definitions:** **a. Class-I local supplier** means a supplier or service provider, whose goods, services or works offered for procurement meets the minimum local content of 50%. **b. Class-II local supplier** means a supplier or service provider, whose goods, services or works offered for procurement meets the minimum local content of 20%. **c. Non- local supplier means** a supplier or service provider, whose goods, services or works offered for procurement has local content less than 20%. **d. Foreign Supplie**r means an overseas supplier.	
2	Local content' means the amount of value added in India (i.e., indigenous items/services added in the offered products/services/works) which shall be the total value of the item procured (excluding net domestic indirect taxes) minus the value of imported content in the item (including all customs duties/IGST) as a proportion of the total value, in percent	
3	The margin of Purchase Preference shall be upto 20%.	
4	'Margin of purchase preference' means the maximum extent to which the price quoted by the "Class-I local supplier" above the L1 (landed cost).	
5	'L1' means the lowest technically accepted tender / bid / quotation (i.e. lowest landed cost including duties, taxes and freight & Insurance).	
6	Works' means all works as per Rule 130 of GFR- 2017, and will also include 'turnkey works'. Works includes Engineering, Procurement and Construction (EPC) contracts and services include System Integrator (SI) contracts.	
7	Purchase Preference:	
	A. Goods/Services/Works which are divisible in nature (required quantity greater than 1 or not a package basis or not Aircraft LRUs):	
	i. If L1 is 'Class-I local supplier', the order/contract for full quantity shall be awarded to L1 bidder.	
	ii. If L1 bid is not from a 'Class-I local supplier', 50% of the order quantity shall be awarded to L1. Thereafter, the lowest bidder among the 'Class-I local supplier' will be invited to match the L1 price for the remaining 50% quantity subject to the Class-I local supplier's quoted price falling within the margin of purchase preference (i.e. 20%) and contract for that quantity shall be awarded to such Class-I local supplier subject to matching the L1 price (inclusive of duties, taxes and freight & insurance).	

	iii. In case such lowest eligible 'Class-I local supplier' fails to match the L1 price or accepts less than the offered quantity, the next higher 'Class-I local supplier' within the margin of purchase preference shall be invited to match the L1 price for remaining quantity and so on, and contract shall be awarded accordingly. In cases where none of the 'Class-I local supplier' within the margin of purchase preference agree to match L1 price, in such cases 100% quantity shall be ordered on original L1 bidder.	
	iv. In case no offers received from 'Class-I local supplier' or none of the 'Class-I local supplier' falls within the margin of purchase preference of 20%, the order shall be processed on L1 vendor.	
	v. In case L1 bidder (not a 'Class-I local supplier') is not accepting splitting of order on 50:50 basis, in that case the order/contract shall be awarded to such 'Class-I local supplier' for full quantity subject to matching the L1 price.	
	vi. Regarding MSEs (Indian vendors): The following additional aspect as indicated below would applicable for procurement which are falls under divisible category (i.e., not applicable for indivisible category), in case of participation of MSEs in the tendering. ☐ If any Indian vendor satisfies the requirement of MSEs stipulation and also falls within the purchase preference margin as called for in MSME policy (in case of matching L1 price) will be considered for ordering 25% of tendered quantity, the balance quantity / works will be considered for distribution amongst all bidders (including MSEs) as per this purchase preference policy. ☐ In case no MSEs qualifies for purchase preference or do not match with L1 price then the total tendered quantity will be distributed amongst all bidders as per this purchase preference policy.	
	Aircraft LRUs in case of goods) and Services: i. If L1 is from a 'Class-I local supplier' the contract will be awarded to L1 bidder. ii. If L1 is not from a 'Class-I local supplier', the lowest bidder among the 'Class-I local supplier' will be invited to match the L1 price subject to Class-I local supplier's quoted price falling within the margin of purchase preference (i.e. 20%) and the contract shall be awarded to such 'Class-I local supplier' subject to matching the L1 price (inclusive of duties, taxes and freight & insurance). iii. In case such lowest eligible 'Class-I local supplier' fails to match the L1 price, the 'Class-I local supplier' with the next higher bid within the margin of purchase preference shall be invited to match the L1 price and so on, and order/contract shall be awarded accordingly. In case where none of the 'Class-I local supplier' within the margin of purchase preference agree to match the L1 price then the order/contract shall be awarded to the original L1 Bidder.	
8	Technically acceptable offers only will be considered for further process.	
9	**Self Certification and Auditor Certificate:** **i. The 'Class I & II local suppliers' should provide a "Self Certification" as per the format enclosed at Appendix-B(Type-I) along with technical offer indicating the % of local content along with details of the location(s) at which the local value addition is made along with the technical offer.** **ii. In cases the quoted price is in excess of Rs.10 Crs (including duties, taxes and freight & Insurance), the 'Class-I & II local supplier' shall provide a certificate as per the format enclosed at Appendix-B(Type-II) from the statutory auditor or cost auditor of the company (in the case of companies) or from a practicing cost accountant or practicing chartered accountant (in case of suppliers other than companies) indicating the percentage of local content along with the technical offer.** **iii. The above sought "Self-certification" shall be provided on vendor's letter head. On similar line for Rs.10 Crs. & above, the certificate need to be provided by the concerned authority as brought out above.** **iv. In case of online tender, scanned copy of the certificate need to be uploaded along with tender and parallely the hard copy of original certificate should be submitted to the Division through post/courier.**	

	v. In case tender calls for the offers from only Class I & II local suppliers: **a. Any bidder has not indicated any % of Local content and also not provided Self Certification, they fall under non local category. As such those offers also will not be considered & rejected.** b. Further, the offered product should meet the minimum local content requirement of 50% for Class-I local supplier & minimum local content requirement of 20% for Class-II local supplier. If the offered minimum local content is less than called for in the tender, the offer will not be considered & rejected, as the offer is sought from local suppliers with notified MLC.	
	vi. In case tender calls for the offers from any suppliers: a. In case the offers sought from any suppliers (i.e. including non-local supplier / overseas supplier), suppliers should provide "Self Certification" indicating the % of local content offered along with details of the location(s) at which the local value addition is made. The purchase preference shall not be applicable (i) in case of non-submission of "Self Certification" and (ii) in case of the offered minimum local content is less than 50%. b. In case a supplier fails to indicate MLC in the specified place in Technical bid & also forgets to enclose the Self Certification, such bidder will be treated as Non-Local supplier & will be dealt accordingly as per the RFQ stipulation.	
	vii. It is expected that the bidder has to indicate MLC as part of offer & Self Certificate and Auditor might have also indicated MLC as per their certification. In case there is difference in those values, the lowest of them will be considered as the applicable MLC & the offer will be dealt accordingly. Other MLC information will be treated as invalid.	
10	A committee (with an external expert from a practicing cost accountant or practicing chartered accountant, if required) constituted for independent verification, shall verify the self-certificate (or) auditor's / accountant's certificates (as applicable) on random basis, as per the requirements.	
11	11. In case of a complaint received from any supplier indicating a need for review / verification of Local content of successful vendor / awarded vendor, for accepting a complaint from such complainant (w.r.t the false declaration given by the successful vendor / awarded vendor on the local content), a complaint fee of Rs.2 Lakhs or 1% of the locally manufactured items being procured (subject to a maximum Rs.5 Lakhs), whichever was higher, to be paid by demand draft by the complainant. In case, the complaint is found to be incorrect, the complaint fee shall be forfeited. In case, the complaint is upheld and found to be substantially correct, deposited fee of the complainant would be refunded without any interest.	
12	False declarations will be in breach of code of the integrity for which a bidder or its successor's will not be eligible/debarred for purchase preference from further tenders / pending tenders for two years along	
13	Further, in case the violation/false declaration established, in such case, a penalty amount upto 2% value of the each order will be deducted on such defaulted bidders.	
14	The Public Procurement (Preference to Make in India), Order 2017 issued by Govt. of India indicates that if there are any general or specific restrictive clauses to restrict participation of Indian companies in	

Mission & Combat System Research & Design Centre
HINDUSTAN AERONAUTICS LIMITED
Vimanapura Post
Bangalore - 560 017 INDIA

Technical Terms and Conditions of Tender - Annexure - 1

Tender Ref. No.MC/S461/1744/22/1

Name of Work: Supply of 3 axis Control Loading System (CLS), System Installation, Integration and Testing

Name of the Vendor/ Firm:	
Quotation Ref. No.:	

PLEASE INDICATE YOUR RESPONSE/ COMPLAINCE/ACCEPTANCE TO THE FOLLOWING TERMS (MANDATORY). INDICATE THE TECHNICAL SPECIFICATION/RANGE AGAINST HAL TECHNICAL REUIREMENTS WHEREVER NECESSARY

Scope of Work	Vendor's Compliance (Complied or not complied)
Technical Requirements	
1. Introduction Mission and Combat Systems Research and Design Centre (MCSRDC), Hindustan Aeronautics Limited (HAL) is involved in Design and Development of two (02) numbers of Fixed Base Full Mission Simulators (FBFMS) for a single seat Jaguar fighter aircraft. One of the deliverable items of FBFMS is the Control Loading System (CLS). The objective of CLS is to provide the artificial force feel on the pilot control column and rudder pedals as per the actual force felt during the real flight of Jaguar aircraft.	
2. Purpose The purpose of this document is to define the technical requirements for design, develop, supply, installation and integration of single seat Jaguar fighter aircraft specific 3 - axis Active Control Loading System (CLS) along with the other Scope of Work (SOW) brought out at subsequent sections of this document.	
3. FBFMS simulator layout The proposed FBFMS simulator layout is as shown in Fig-1. It consists of cockpit shell placed over a support platform, pilot ladder and racks / electronic equipment below the cockpit shell. The entire setup is positioned inside a 3.65m radius dome. Proposed FBFMS cockpit layout is given in Fig.2. 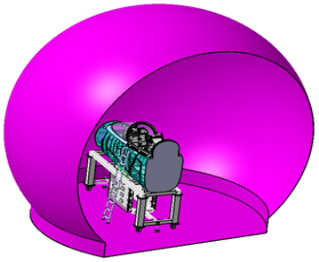 Fig-1: Proposed Simulator Layout	
4. CLS System Requirements 1. CLS shall be single seat Jaguar aircraft type specific active control loading system for the FBFMS. 2. The control loading system is required to provide artificial force feel in all three controls viz., Pitch, Roll and Yaw. 3. CLS shall be a fully active Digital Electric Control Loading System with no pneumatic and no hydraulic components. 4. FBFMS cockpit controls are comprised of control column and rudder pedals. The force exerted by the control loader actuators on these controls shall be transmitted by using mechanical linkages. 5. CLS Hardware shall consist of Electric control loader actuator, servo drive, power supply module, control cabinet, circuit breakers, emergency reset, CLS computer, connecting cables and other accessories to meet the CLS operational requirements. 6. Control loader Actuators shall be COTS based standard electric servomotors and shall be driven by servo drive unit. No other actuator types are acceptable. 7. CLS computer shall interface with Host Computer of FBFMS through Ethernet.	
5. Brief of Flight control system of Jaguar aircraft The Jaguar aircraft is controlled in the three axes by the primary flying controls viz pitch, roll and yaw. The control surfaces for these three axes are operated by irreversible, hydraulic powered flying control units. The control rods and linkages run along the sides of the Jaguar aircraft cockpit are as shown in Fig - 2.	

Scope of Work	Vendor's Compliance (Complied or not complied)
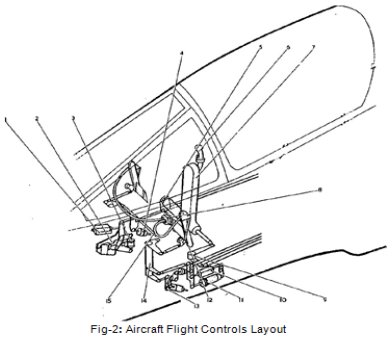 Fig-2: Aircraft Flight Controls Layout 1. Tail plane trim actuator 2. Artificial force control unit 3. Tail plane spring box 4. Pitch Dashpot 5. Tail plane control 6. Control column pistol grip 7. Control column 8. Rudder pedal Adjuster unit 9. Roll bell crank 10. Rudder trim actuator 11. Rudder spring box 12. Port rudder pedal 13. Rudder Gearing assembly 14. Rudder bell crank 15. Rudder pedal interconnecting rod	
Details of control column and pedals operations are described in following paragraphs.	
5.1. Control Column Control Column has two movements for Pitch and Roll control. Control Column with Stick Top is shown in Fig - 3 for reference. The hollow control column body is rectangular in section and has the roll bell crank mounted in the lower part.	
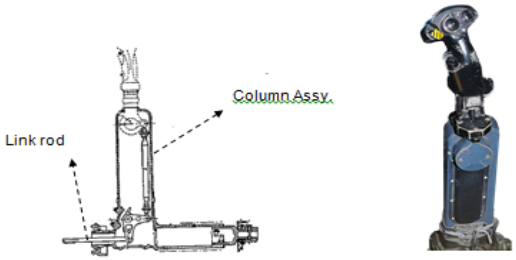 Fig-3: Control Column and Stick Top	
5.1.1. Pitch Control The Control column total range of travel is 22° 5' for nose up and down is as shown in Fig- 4. Pitch flight control is a powered control system. The pilot is provided with artificial force feel. Artificial feel is proportional to the control column displacement, aircraft speed and altitude as indicated in Table-1 and Table - 2. The initial break out force to move pitch control is between 0 and 0.54 daN.	
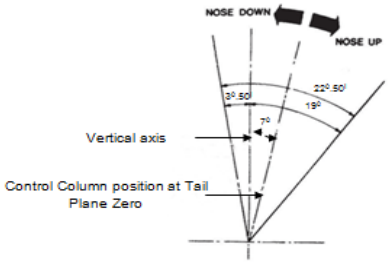 Fig – 4: Control Column travel in Pitch Note: The range of 7 deg. aft of the vertical axis is termed as point of inflection. At the point of inflection, control surface deflections are small.	

Scope of Work	Vendor's Compliance (Complied or not complied)

Pitch Column Displacement / Indicated Air speed (Knots)	Feel Force (daN)			
	1 deg	2 deg	3 deg	4 deg
300	1.3 ± 0.25	2.15 ± 0.35	2.9 ± 0.4	3.5 ± 0.5
400	1.6 ± 0.25	2.6 ± 0.4	3.4 ± 0.4	4.1 ± 0.5
450 and above	1.75 ± 0.25	2.9 ± 0.4	3.9 ± 0.5	4.7 ± 0.5

Table 1: Pitch Feel Values – Forward

Pitch Column Displacement / Indicated Air Speed (Knots)	Feel Force (daN)					
	2 deg	4 deg	6 deg	8 deg	10 deg	12 deg
300	2.5±0.4	4.5±0.5	6.75±0.75	10.7±1	16.5±1.5	23.5±2
400	3.0±0.4	5.0±0.5	8.0±0.75	13.0±1.25	20.5±2	30±3
450 and above	3.25±0.4	5.6±0.5	9.0±1	15±1.5	24±2	36.5±3.5

Table 2: Pitch control Feel Values – Aft

5.1.2. Roll control

The Control column range for roll control of travel is 36° ± 1° in port and 36° ± 1 in star board side is as shown in Fig-5. Roll flight control is powered control system. The pilot is provided with artificial force feel. Artificial feel is proportional to the rate of control column movement as per Table 3. The initial break out force to move roll control is between 0 and 0.3 daN.

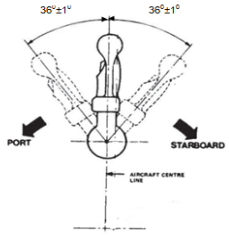

Fig – 5: Control Column travel in Roll

No.	Roll control column displacement (deg)	Force (daN)
1	-36	6
2	-30	4.7
3	-15	3
4	-3	1
5	0	0
6	3	1
7	15	3
8	30	4.7
9	36	6

Table 3: Roll control Feel Values

5.2. Rudder Pedals

The rudder pedals for yaw control are shown in Fig-6. Rudder flight control is powered control system. To accommodate for the varying pilot leg lengths, the rudder pedal position can be altered by means of a rudder pedal adjuster. Rudder pedal adjustment shall be 228.6 mm. Once the adjustment is done, the rudder pedal linear travel shall be 165 mm (either side of neutral : 82.5 mm) and Rudder pedal travel is as shown in Fig-7. Artificial feel is proportional to the displacement of the pedal from neutral as per Table- 4. The initial break out force to move the rudder pedal is approximately 10.3 daN.

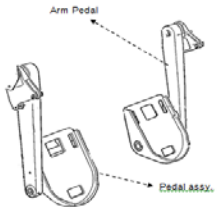

Fig.6: Rudder Pedals

No.	Rudder pedal (mm)	Force (daN)
1	Maximum Movement of rudder in either side of neutral : 82.5 mm	42

Table 4: Rudder Pedal control Feel Values

Scope of Work	Vendor's Compliance (Complied or not complied)

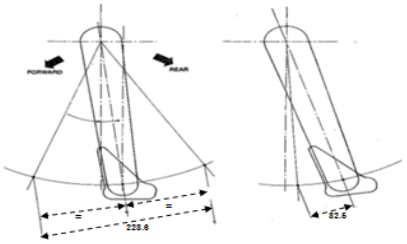

Fig.7: Rudder Pedals travel

Table-5: Details of Other controls

No.	ITEM	DETAILS	
1	Rate stabilization	The function of the rate stabilizer is to increase the natural stability of the aircraft about the pitch, yaw and roll axes. The consequential movements of the control surfaces improve the aircraft reactions to damp out oscillations by diminishing the rates about all three axes; this effect is not fed back to the control column or rudder pedals.	
2	Trim mechanism	A spring box associated with an electrical trim actuator is incorporated in three (pitch, roll, yaw) control run. The box provides the pilot with artificial feel during manoeuvres and centres the control to a trimmed position. By using the trim actuator, the pilot can change the trimmed position and select a control position to give zero control force	
3	Autopilot	Autopilot is interfaced with the pitch and roll trim systems of the aircraft. The automatic trim in pitch and roll is activated at autopilot engagement. The autopilot ensures the following functions: • Automatically sends commands to aircraft control surfaces on Pitch and Roll axis, • Automatically sends commands to trim the aircraft in pitch and roll axis.	

6. CLS Specification

The active digital electric control loading system (CLS) is required for providing force feel in all three axes, namely pitch axis, roll axis and yaw axis as per the Jaguar aircraft Flight control system as defined in section 4 and 5 of this document.

7. CLS Architecture

The required Architecture for the Active Control Loading System is provided in fig -8.

Note: The contents indicated inside the dotted line are vendor's scope of supply.

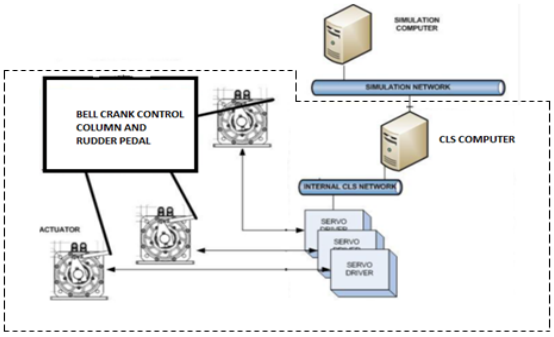

Fig.8: CLS Architecture

8. CLS Hardware Requirements

Vendor shall supply following hardware items as part of the Active Control Loading System (CLS).

a) Mechanical Linkage System with suitable mounting system

The Mechanical linkage system shall transfer load from the control loader actuator to the cockpit flight controls to emulate in-flight forces. Primary flight controls shall be connected to control loader actuator through linkages including attachment frames, Bell crank levers and brackets. All the linkages as well as mounting of the control loader actuator shall be made rigid, so as to minimize elastic deflection.

The mechanical linkages must be designed for high stiffness, minimal friction and optimal gearing.

Note:

1) The control column assembly along with link rod as shown in fig. 3 will be integrated on the cockpit shell in the same position as in the actual aircraft by HAL. Vendor to fabricate the other required Bell crank levers, attachments, link rods etc., required for the control loading system and integrate & install the same on cockpit shell at HAL, Bangalore.

2) LH & RH Pedal assemblies as shown in fig.6 will be integrated on the cockpit shell in the same position as in the actual aircraft by HAL. Vendor to fabricate the other required levers, attachments, link rods etc., required for the control loading system and integrate & install the same on cockpit shell at HAL, Bangalore.

3) All necessary fasteners, tools and equipment required for integration of CLS with the cockpit controls shall be the responsibility of the vendor.

Scope of Work	Vendor's Compliance (Complied or not complied)
b) Control loader actuators The control loader actuators shall be rotary actuators and shall transfer forces and moments through linkages to the control stick and pedals. The control loader actuators shall be COTS based standard electric servomotors in all three axes. Specification of Control Loader Actuator: 1. Torque (Continuous) : 150 Nm or more 2. Torque (Peak) : 230 Nm or more 3. Stroke : +/- 45 degree or more 4. Velocity : 580 degree /sec or more Same actuator model shall be used in all three channels.	
c) Servo Drive unit Each control loader actuator shall be driven by a dedicated servo drive unit.	
d) CLS Computer 1. Vendor shall supply one CLS computer for running CLS software in real time. 2. Computer supplied shall have Ethernet interface for networking with the host computer / Flight Model. 3. A detailed Ethernet Interface Control Document (ICD) between CLS computer and Simulation Host / Flight Model shall be defined and mutually agreed by HAL and the vendor during the design phase. 4. Vendor shall provide the required software in suitable media to enable HAL / end user to independently re-install the software to new CLS computer in case of any un-serviceability of CLS computer. Vendor shall support transfer of licenses to a new CLS computer without any additional cost 5. All the software licenses supplied shall be perpetual licenses.	
e) Power supply Unit A dedicated power supply unit shall be provided for servo drive units, control loader actuators and other CLS components.	
f) Rack Rack shall be provided to house the CLS computer, Electrical and electronic components of the CLS with the following requirements. • All Connectors shall be accessible and easy to connect / disconnect, • All Connectors and cable looms must have a neat appearance, and must not impede user or maintenance access to the control loading system. • All cables shall be clearly marked with a unique reference, which shall allow relation of each cable with the supporting documentation. • The Rack shall permit easy access to all components housed inside.	
9. CLS Software requirements Vendor shall supply the following software's. a) CLS software CLS software shall be type specific to Jaguar aircraft. The CLS software shall compute the expected forces based on the flight control position and flight parameters received from Host computer in Real time. Further, measured control stick position and pedal position shall be sent to host computer through Ethernet. b) Maintenance utility Software This software shall enable all CLS control & monitoring functions, configuration/ tuning of CLS parameters in each axis. The Maintenance utility software shall be installed in CLS computer or separate computer, which needs to be provided by vendor. A LCD monitor (minimum 15 Inch size) shall be provided to operate the maintenance utility software.	
10. Power Supply a) The computer workstations & monitors and other electronic equipment of CLS should be capable of running on commercial power supply 230V – Single phase / 415 V 3 phase (± 10%), Frequency 50 - 60 Hz. b) Power distribution of CLS and supply of associated equipment like power distribution boards for connecting actuators, computer and other electronic equipment is vendor's responsibility.	
11. Measurements on Jaguar aircraft: HAL will share the available Jaguar Aircraft Documents on primary flight controls after placement of Purchase order. Further, if required, HAL can provide the vendor to access the powered aircraft on ground for measurement of forces and displacement of aircraft controls after placement of purchase order. Vendor need to arrange the necessary tools required to carry out measurement at HAL, Bengaluru.	
12. Operating Conditions All the equipment supplied by the vendor should work without any performance degradation under the following operating conditions: Operating Conditions: i. Temperature: 150 C to 300 C ii. Relative Humidity: 35% to 60% Vendor to provide the OEM's data sheets / catalogues, COC and any other relevant documents where in the above operating conditions are mentioned for acceptance.	
13. Storage Conditions All the equipment supplied by the vendor should work without any performance degradation under the following Storage conditions: i. Temperature: -100 C to +550 C ii. Humidity: 90% RH at +400 C Vendor to provide the OEM's data sheets / catalogues, COC and any other relevant documents where in the above storage conditions are mentioned for acceptance.	
14. Other Requirements: a) The vendor shall integrate the CLS with the flight controls viz., control column and rudder pedal. Details of control column assembly and Rudder pedal along with its location in cockpit will be provided in 3D model (IGES format) after placement of PO. b) The attachment brackets/levers and linkages should be positioned below the cockpit floor in such a manner that integration and maintenance can be carried out without lifting of the cockpit shell. c) CLS shall provide Trim operation in all three axes and activation of automatic trim in roll and pitch axis at autopilot engagement. d) Self-Alignment: CLS shall have the ability for self-alignment and resetting the cockpit controls to neutral positions. e) Vendor to provide the CLS integration requirements in the cockpit shell during design phase so as to enable the cockpit shell manufacturer to accommodate the same in the cockpit shell. f) Automatic Fault Detection: Control Loading System shall have the ability to detect faults during its operation. g) Adequate safety mechanism to be provided for safety of the trainee pilot. Safety systems for Control Loading System and its accessories to be supplied. h) Vendor shall develop and supply to HAL a complete layout design in 3D model (IGES/STP format) indicating the details of linkages, levers & attachment brackets etc. from pilot controls to the control loading system during design phase.	
General Requirements (Part of Technical Bid)	
1.0 Vendor Qualification Criteria	

Scope of Work	Vendor's Compliance (Complied or not complied)
a) Vendor should have developed, installed, integrated and obtained customer acceptance for at least one 3-Channel (Pitch, Roll and Yaw) Control loading system (CLS) for Flight simulator applications. Vendor should have supplied the subject CLS to simulator manufacturers or simulator end users across the world. b) Indian vendors who have not carried out all the CLS activities as mentioned at Para.(a) and intend to submit the response to this RFP, should have at least carried out installation and integration of one 3-Channel (Pitch, Roll and Yaw) control loading system by themselves for Flight simulator applications. c) To support the above claim at (a) or (b) as applicable, vendor shall provide documentary evidences viz. Purchase Order or Certificate of Completion or other equivalent documents along with the bid. d) If any Indian vendor is having collaboration for supply of Control Loading System, the bid should accompany a formal letter from collaborator stating that the collaborator will ensure quality and performance of the product as well as warranty and full product support. The above requirements are mandatory requirements and offers not meeting these requirements shall be summarily rejected.	
2.0 Other Requirements 2.1. Delivery Location and Installation Requirements a) Vendor shall deliver the Control loading System at HAL, Bengaluru as per the delivery schedule mentioned at Para 4.0 of this document. b) Vendor shall carry-out installation of Control loading System in simulator cockpit at HAL, Bengaluru. c) Arrangement of all the equipment / tools required for installation at HAL, Bengaluru is the responsibility of the vendor.	
2.2. Standalone Testing, Integration Testing and Acceptance 2.2.1. Standalone Testing a) After installation Control Loading System in simulator cockpit, standalone testing of CLS shall be carried out by vendor at HAL, Bengaluru. b) Vendor is required to provide acceptance test procedures for standalone testing of CLS at HAL, Bengaluru. The test procedures shall be mutually agreed by the HAL and Vendor. Vendor shall ensure the performance of CLS as per the technical requirements mentioned in document no. MCSRDC/JSIM-DIII/TR/CLS/02/00. c) Arrangement of all the hardware & software testing tools required for standalone testing and demonstration at HAL, Bengaluru is the responsibility of the vendor.	
2.2.2. Integration Testing a) After completion of standalone testing, Vendor shall carry out integration of Control loading System with Simulation Host and other subsystems of FBFMS, e.g. Aero model as per the defined ICD. b) Vendor is required to provide acceptance test procedures for integration testing of CLS at HAL, Bengaluru. The test procedures shall be mutually agreed by the HAL and Vendor. Vendor shall ensure the performance of CLS as per the technical requirements mentioned in document no. MCSRDC/JSIM-DIII/TR/CLS/02/00. Vendor shall resolve the issues if any (related to vendor's scope of work) noticed during the said integration.	
2.2.3. Acceptance Acceptance of the control loading system shall be based on the following: (i). Satisfactory completion of standalone testing of Control loading system. (ii). Satisfactory completion of integration testing of Control Loading System with FBFMS.	
2.3. Factory Acceptance Test (FAT) Factory Acceptance Test (FAT) of complete simulator shall be carried out at HAL, Bengaluru by the end user. During FAT, the end user pilot shall qualitatively & quantitatively test FBFMS for complete flight envelope and mission profile of the Jaguar Aircraft. Vendor shall take-up necessary modifications to close all the observations (related to vendor's scope of work) noticed during the FAT.	
2.4. Site Acceptance Test (SAT) a) After successful completion of FAT at HAL, Bengaluru, the simulator along with control loading system will be shipped to end user site by HAL. The dismantling of CLS items for shipment shall be carried out by HAL. Vendor to provide the procedure and necessary support for dismantling. b) Vendor is required to integrate the dismantled items of the control loading system in simulator at respective end user site. c) SAT of simulator will be carried out by the end user at end user sites. Vendor is required to participate in the SAT to take-up necessary modifications to close all the observations (related to vendor's scope of work) noticed during SAT. Vendor shall be responsible for getting the control loading system accepted by end user.	
d) Arrangement of all the hardware & software testing tools required if any during SAT at end user sites is the responsibility of the vendor. e) The end user sites are located in north and western part of India and are approximately 2000 Kms away from Bengaluru, India by road and the end user of the simulator is Indian Air Force.	
2.5. Training Vendor is required to provide operations and maintenance training to HAL personnel at HAL, Bengaluru after the acceptance (as per Para 2.2.3) of 1st set of Control Loading System. The duration of training shall be for a period of 03 days for 05 participants. Training aids should include training notes & PPTs. The training shall cover the following aspects of Control loading System: i. Operation and Usage of Control loading system. ii. Configuration / tuning of CLS parameters iii. Maintenance, testing and diagnostics of the hardware and software including installation of software. iv. The training shall include theoretical and hands-on practical training to achieve proficiency on O-level maintenance of the equipment. v. Vendor shall provide hardcopy of training notes to all the participants.	
3.0 List of deliverables Following are the list of deliverables in terms of supplies and services of Control loading system Table-1 List of Deliverables Sl.no. | Item Description | Unit | Quantity 1 | Three Axes Control loading system with Control Loader Actuators, servo drives, Power supply module, Rack, interface electronics, interconnecting cables, and its accessories | Set | 2 2 | CLS computer along with CLS software, Maintenance utility Software, LCD monitor (minimum 15 Inch size). CLS software in suitable media. | Set | 2 3 | Mechanical Linkages with suitable mounting system | Set | 2 4 | Documentation (Refer Para 6.0) | Set | 2 5 | Spares (Refer Para 12.0). | Set | 2	

Scope of Work	Vendor's Compliance (Complied or not complied)

6	Services towards the following: a) At HAL, Bengaluru: 1. Installation and Standalone Testing, Integration Testing of control loading system with simulation host and other sub-system of FBFMS. 2. Take-up necessary modifications to close all the observations (related to vendor's scope of work) noticed during FAT. b) At End User Sites: 1. Reinstallation and integration of control loading system with Flight simulator. 2. Participation in the SAT to take-up necessary modifications to close all the observations (related to vendor's scope of work) noticed during SAT.	Nos	2

4.0 Delivery and Program Schedule:

The delivery timelines with respect to control loading system are given below. Vendor is required to strictly comply with the time lines.

Table-2: Delivery Schedule

S/N.	Control Loading System Activities	Time line
1	Preliminary Design Review (PDR)	T_0+1 Months
2	Critical Design Review (CDR)	T_0+3 Months
3	Delivery of 1st set of control loading system along with 1st set of spares at HAL, Bengaluru.	T_0 + 10 Months
4	Installation, completion of standalone testing and Integration testing of 1st Set of control loading system at HAL, Bengaluru and Training	T_0 + 11 Months
5	Completion of Factory Acceptance Test (FAT) and rectification of observations specific to vendor Scope of Work (if any) noticed during FAT of 1st FBFMS at HAL, Bangalore	T_0 + 20 Months
6	Completion of Site Acceptance Test (SAT) and rectification of observations specific to vendor Scope of Work (if any) noticed during SAT of 1st FBFMS at Site1	T_0 + 23 Months
7	Delivery of 2nd set of control loading system along with 2nd set of spares at HAL, Bengaluru.	T_0 + 22 Months
8	Installation and completion of standalone testing and Integration testing of 2nd Set of Control Loading System at HAL, Bengaluru	T_0 + 23 Months
9	Completion of Factory Acceptance Test (FAT) and rectifiction of observations specific to vendor Scope of Work (if any) noticed during Factory Acceptance Testing of 2nd FBFMS HAL, Bangalore	T_0 + 29 Months
10	Completion of Site Acceptance Test (SAT) and rectifiction of observations specific to vendor Scope of Work (if any) noticed during Site Acceptance Testing of 2nd FBFMS at Site 2	T_0 + 32 Months

Note 1: T_0 : Date of placement of Purchase Order

Note 2: The items should be supplied as per the delivery schedule indicated above. As time is the essence of this programme for integration of control loading system on simulator, deviations from the schedules will not be acceptable to HAL and may render the bid submitted by the vendor liable to be rejected.

5.0 Warranty

i. The each control loading System supplied by the vendor shall carry onsite warranty for 24 months from the date of acceptance by HAL as per Para No. 2.2.3.

ii. The vendor shall warrant that the Control Loading System shall confirm to the technical specifications and shall perform according to the said technical specifications. Any technical changes or modifications or any repair or replacement or maintenance arising during warranty period to meet the technical specifications shall be done free of cost by the vendor. The Control Loading System and associated accessories supplied shall be free from defects in materials & workmanship and fit for the intended purpose.

iii. Vendor shall ensure that the annual cumulative downtime period for the Control Loading system and associated accessories does not exceed 10% of the warranty period. Warranty of the Control loading system would be extended by such duration of downtime. Record of the down time would be maintained by user in log book.

iv. Vendor shall either repair or replace the faulty item during warranty period to meet the uptime requirement as per Para iii mentioned above. Vendor shall put all the efforts to provide the warranty services on highest priority to meet the uptime requirement as & when defect is notified to the vendor.

6.0 Documentation

Two hard copies & two soft copies (DVD) of the following documents for the Scope of Work are to be supplied for each set of CLS:

a. User Handbook / Operating manual.
b. Technical specifications, including interfaces of the Control Loading System, software ICD etc,.
c. Electrical drawings including pin details of interconnecting cables.
d. Mechanical drawings covering sub-assembly, assembly and installation.
e. Maintenance Manuals covering installation procedure along with tools, maintenance, troubleshooting and parts replacement.
f. Bill of Material (BOM).
g. Mutually agreed Stand alone and Integration Test Procedures along with Acceptance Test Report (ATR).
h. Training material.
i. Certification of Compliance (COC), Datasheets and Serviceability tags for CLS.
j. Vendor documents supplied by the third party vendor, if any.

7.0 Product Support

Vendor shall provide product support for a minimum period of 20 years with regard to necessary spares, consumables and services. In case of obsolescence of products / sub systems / components, the same has to be communicated to HAL in regular intervals for necessary action by HAL. Even after the said mandatory period, vendor would be bound to give at least two years notice to the HAL/end user prior to closing the production line so as to enable a Life Time Buy of all spares before closure of the said production line. All upgrades and modifications carried out on the equipment during its lifecycle must be intimated to HAL.

8.0 Design Review and Progress Review Meetings:

Vendor should participate in the Preliminary Design Review (PDR), Critical Design Review (CDR) and Progress Review meetings through video conference that would be planned for design and development of control loading system.

9.0 Quality Management System (QMS) Requirements:

Vendor shall have Quality Management System (ISO 9001) or Aerospace AS9100 certification / approval and required to submit the copy of the same along with the technical offer.

10.0 Endurance

The control loading system shall be capable of undertaking daily operation of 10 hrs/ day continuously. Endurance test of Control Loading System for 10 hours shall be carried out during FAT.

11.0 Year of Production

The equipment should be latest manufactured items at the time of delivery

Scope of Work	Vendor's Compliance (Complied or not complied)
12.0 Spares Following mandatory spares shall be delivered by the vendor along with respective set of control loading system: Table-3: Spares (see table below) It is mandatory to provide line item wise cost for each line item given in Table-3 in the commercial bid.	
13.0 Government Regulations Vendor is required to confirm that there are no Government restrictions or limitations in the country of the supplier or countries from which sub-components are being procured and / or for the export of any part of the system being supplied.	
14.0 Obsolescence Management In case of obsolescence of any item / spare parts / assemblies, vendor shall provide an alternate solution/equivalent item readily available in the market. The vendor shall continue to support the control loading system for a minimum period of 20 years by making available spare parts and assemblies of control loading system.	
15.0 Repeat Order In the event of placement of purchase order, HAL reserves the right to place repeat order for the same items by any of its divisions within 12 months from the date of completion of the original order. The repeat order may be placed up to 100% of the value of the original order either by single order or multiple orders totaling to 100% value of the original order. The prices, terms and conditions of the repeat order shall be same as that of the original order.	
16.0 Submission of Proposal Vendor shall provide the following documents/details along with the Technical bid: (i). Technical description and details of the proposed control loading system. (ii). Para wise compliance table with respect to technical and general requirements of control loading system along with relevant technical details or datasheets to support the compliance. (iii). Response to each requirement shall contain adequate details in the technical proposal submitted by the vendor for compliance verification instead of merely stating "Complied". (iv). Company ISO 9001 or Aerospace AS9100 certification / approval.	

S/N	Item Description	Qty required for first set of control loading system	Qty required for second set of control loading system
1	Control loader actuator	2	1
2	One Channel servo drive	2	1
3	CLS computer	2	1
4	Power supply module	2	1
5	Rack spares covering fuses, circuit breakers	2 Set	1 Set
6	Cable set	2 set	1 set
7	Input / output module set	2 set	1 set
8	Safety mechanism / Relay	2	1

****

ANNEXURE-2

Mission & Combat System Research & Design Centre
HINDUSTAN AERONAUTICS LIMITED
Vimanapura Post
Bangalore - 560 017 INDIA

Commercial Terms and Conditions (For Indigenous supplier) of Tender - Part of Technical Bid.

Tender Ref. No.:MC/S461/1744/22/1

Name of Work: Supply of 3 axis Control Loading System (CLS), System Installation, Integration and Testing

Name of the Vendor/ Firm: **Please mentioned the email ID and contact details also.**	
Quotation Ref. No.:	

PLEASE INDICATE YOUR RESPONSE/ COMPLAINCE/ ACCEPTANCE TO THE FOLLOWING TERMS (MANDATORY) AND UPLOAD AS A PART OF TECHNICAL BID

SL. NO.	HAL RFQ terms & conditions	Vendor Compliance (Complied/ Non - complied)
1	**Price:** Prices to be quoted in the precribed fomat at Annexure 3. The bidder is required to indicate prices against individual items.	
	Price quoted should be on F.O.R. Destination, for delivery at Stores as indicated in RFQ requirement document inclusive of all charges including transit insurance.	
1b	**Vendors should note the following, if exchange rate variation is claimed on the quoted prices:** i) Vendor should invariably specify the Import Content included in the quoted prices in terms of Foreign exchange as well as Indian Rupees. In the absence of this input, it would be considered that vendor will be not claiming exchange rate variation. ii) Exchange rate variation (+/-) will be paid only to the extent of Import Content. For the purpose of commercial evaluation, if ERV is applicable, ERV reckoning date shall be the last date of submission of Commercial bids (i.e., due date of the tender). The exchange rate prevailing on last date of submission of Commercial bids (i.e., due date of the tender will be considered for the import content and will be loaded on to the indigenous content to arrive at the total value. iii) However, for purpose of making ERV payment, actual value of import (to be supported by BOE, etc) or declared value of import in bidders quote whichever is lower to be considered for calculation of ERV based on TT selling rate on the date of BOE. iv) Bidders to invariably accept for the above conditions in case exchange rate variation is claimed on the quoted prices, failing which, the offer will be liable for rejection. v)Exchange rate variation on the higher side, shall be paid by the HAL and similarly any exchange rate variation on lower side i.e. price reduction, to be passed on to HAL	
2	**Taxes:** **GST:** Rate of Tax or any other Tax chargeable should be clearly indicated in the offer / bid as inclusive in the price quoted or extra along with the HSN Code. If not indicated, HAL will assume that the rates quoted are inclusive of taxes.	
3	**Quantity :** The quotation must be in the unit in which the quantity is indicated in the enquiry. If it is otherwise, conversion data must be furnished.	
4	**Supply of Alternative Item** : In case bidder is quoting for an alternative part number it should be confirmed that the offered part is fully interchangeable with the required part. Applicable descriptive literature/catalogue if any may please be enclosed by the bidder with offer (at least two copies).	
5	**Shelf Life :** Where stores offered have a limited shelf-life, kindly indicate the life involved and confirm that in the event of an order from us, only newly manufactured stores with the maximum possible shelf-life at the time of dispatch will be offered for shipment. In respect of rubber items such as seals etc., having care date, the item should not have been manufactured earlier than 6 months of dispatch.	
6	**Validity of the Quotation :** Price quoted should be net and unless otherwise specified should remain valid for our acceptance for a minimum of **120 days** from the closing date of enquiry and the materials of offered should be kept under provisional reservation for this quotation.	
7	**Tender Due Date :** The due date for submission of quote is as indicated in RFQ through e-procurement mode only.	

8	**Submission of Tender : Response to bid through e-Procurement should be uploaded in the e-portal only.** 1. Bidders are requested to submit their proposals (Technical and Price bid) online at HAL's eprocurement portal (http://eproc.hal-india.co.in or link to e-Procurement through www.hal-india.co.in). Tenders submitted through any means other than e-procurement portal will not be considered and will be rejected (No Hard copies of Technical and Price bid should be submitted). 2. Response to bid through e-Procurement should be uploaded in the e-portal only. Bid submitted by bidder's authorized dealer / distributor/channel partner should accompany with ink signed authorization letter of the bidder to whom tender has been originally issued. In the absence of authorization letter, the bids submitted shall be considered an unsolicited. 3. Vendors should ensure the bids are submitted as per RFQ well before due date and time of tender. Vendor may note technical bid should include technical aspects only. If prices are indicated in the technical bid or attached as a part of technical bid even in the form of PDF, the offer will not be considered for evaluation.	
9	**PRE-BID Meeting:** A pre bid meeting has been arranged on **31.01.2022 at MCSRDC** Division, HAL , Bangalore at 14.00 PM (IST). All the bidders are invited to attend the meeting in order to understand the requirement and clarify any doubts before submission of bids. All the Interested vendors have to forward the names of attendees for the pre bid meeting to email ID: suresh.patri@hal-india.co. and sanjay.kumar5@hal-india.co.in in latest by **29/01/2022**	
10	**Tender Evaluation:**	
	L-1 (Lowest Bid) will be decided based on Package wise basis inclusive of all Taxes and Duties for the Price Bid Annexure 3)	
	DISCREPANCIES IN THE QUOTATION: a) where there is a discrepancy in unit rate and total value, the unit rate will be considered for evaluation. b) Where it is not indicated whether the rate quoted is unit rate or Total value, the price indicated shall beconsidered as Unit rate and evaluated accordingly. c) Where there is discrepancy in the amount quoted in words and Figures, the amount in words will be considered for evaluation. d) Where there is discrepancy between the clauses of the laid down terms and conditions and the technical specification, the technical condition shall hold good, valid, final and binding.	
	Bid with lowest price conforming to the specification will be considered for placement of order.	
11	**Purchase Preference Policy :** Please refer Appendix-A for policy details. Provide your compliance to this policy by indicating Complied against this coloumn. In line with Public Procurement (Preference to Make in India), Order 2017 & its amendments issued by Govt. of India & with a view to support the Indian industries, HAL has implemented "Purchase Preference Policy". The "Purchase Preference" is applicable for the "Class-I Local Supplier" for the goods/services/works covered in this tender subject to the Terms & condition of Purchase preference clause as attached at Appendix-A Type-II. Note: (a) The subject item falls under INDIVISIBLE category. **(b) The offers sought from all suppliers i.e. Class-I, Class-II Local supplier and Non-local suppliers/ Foreign supplier).** (d) The margin of Purchase Preference shall be up to 20% only for Class-I Local Supplier. The bidders are requested to go through the same & submit the bids accordingly and provide the compliance for the same.	
	In addition to price any other criteria if to be adopted, the most advantageous bid ascertained on the basis of criteria specified in the enclosure will be considered.	
12	If the bidder considers that tendered quantity is small, the bidder may quote for Minimum Ordering Quantity (MoQ). Commercial evaluation in this case will be done on MoQ x unit price, if MOQ offer beyond 20% of RFQ quantity.	
13	If two or more bidders quote the same price, HAL reserves the right to seek revised offer from the same bidders and placing order on revised L-1 offer. If same situation prevails then HAL reserve the right to place order on any of them.	
14	Conditional discounts will not be considered in evaluation of tender.	
15	Applicability of the Taxes should be explicitly indicated by the bidder in his response either in percentage or in absolute terms. In the absence of this input the offer would be considered all inclusive.	
16	In respect of two bid system, technical bid will be opened on the tender opening date. After technical evaluation, the Commercial bids of those bidders who are technically acceptable will be opened.	

17	**Others :-** Please indicate approximate net weight of each of the item and gross weight and dimension of the package to enable HAL to determine the mode of dispatch.	
	Please indicate in your tender, whether stores newly manufactured are offered. Where newly manufactured stores are offered and on inspection it is found that reconditioned stores or parts have been used, such stores will be rejected at the contractor's risk and expense.	
	Manufacturer's name and country of origin of the materials offered must be clearly specified. Complete details and illustrated literature must accompany all quotations.	
	Vendors should clearly indicate similar equipment supplied on global basis to Aircraft manufacturing industry, to any Division of HAL and other reputed/Govt customers and anywhere in India with customer's full address, telephone/telefax No., P.O. No., value and year of supply.	
	HAL is not bound to accept the lowest or any quotation and reserves the right of accepting the whole or any part of the quotation or part of the quantity offered and bidder must supply the same at the rate quoted.	
	Vendor shall not be entitled without HAL's consent to assign or transfer to a third party all or part of the benefits or obligations under this contract.	
18	**Security Deposit**:a) Successful vendor, shall have to deposit 3% of the value of the order as Security Deposit (to be calculated only on basic cost excluding taxes & duties, if such details are furnished separately in the bid submitted) within 15 days of receipt of the purchase order, by demand draft or bank guarantee in a prescribed format of H.A.L from a scheduled bank in India / bank of international repute (for Foreign vendors), valid up to 60 days after the completion of contract period/last supply. This Security Deposit will bear no interest and will be returned only after the contract is completed to the entire satisfaction of H.A.L. In case, quotes received without indicating the break-up details of GST and order placed subsequently on composite value (without indicating breakup details of taxes & duties) then the Security deposit to be sought on the composite value (including taxes & duties) **Note - Loading factor of 3% shall be considered during Commercial Evaluation for bidders who have not agreed for submission of Security Deposit**	
	b) In case the contract is not executed to the entire satisfaction of HAL the security deposit shall be forfeited, besides initiation of risk purchase action	
	c) No claim will be entertained against HAL either in respect of interest, if any due on the security deposit or depreciation in value.	
	d) On due performance and completion of the contract in all respects, the security deposit will be returned to the vendor, without any interest, on presentation of absolute "No Demand Certificate" and upon return in good condition of any specifi cations, drawings, samples or any other property belonging to the purchaser, which may have been issued to the vendor.	
19	**Liquidated Damages**: In the event of an order, we reserve the right to collect a sum of 0.5% per week of delay or part thereof, subject to a maximum of 10% as our claim- towards liquidated damages on the undelivered part of the order. **In case of tenderers not agreeing for LD clause, the maximum LD amount / to the extent not agreed LD value, to be loaded in the Comparative Statement, to determine the successful bidder.**	
20	**PERFORMANCE BANK GUARANTEE:** Successful bidder (Seller) after placement of order and supply of product, shall provide Performance Bank Guarantee as per HAL's format for 3% of the order value of supplies valid up to end of the warranty period of supplies from a Nationalised Bank/Scheduled bank in India / Bank of International repute (for foreign vendor) or otherwise equivalent amount shall be retained till completion of warranty period or until all the vendor's obligations as per the Purchase Order / contract are fulfilled to the satisfaction of HAL. **Note: In case vendor does not agree for Performance Bank Guarantee / retention of equivalent amount, the offer shall be summarily rejected.**	
20.a	"The successful supplier shall execute the order/contract as per the requirement and ensure the compliance of clauses like performance of order/contract, warranty etc. as required under the order/contract. Any non-compliance of order/contract requirements, shall entitle HAL to initiate appropriate penal actions as deemed necessary, including banning of such supplier for a period upto two years besides invoking of Bank Guarantee"	

20.b	**GUIDE LINES FOR SUBMISSION OF BANK GUARANTEES:** • Bank guarantees should be submitted in the specified formats without any errors, deviations or conditions/riders. Current formats are enclosed. However bidders should comply with prevailing formats and guidelines of HAL with respect to BGs at the time of issue of BGs. • All Bank Guarantees should be submitted to HAL directly by the issuing Bank under Registered Post (A.D.). • Bank Guarantee shall be authenticated by Bank's signatory with official seal. • The name, designation and code numbers of the Bank officer / officers signing the BGs should be incorporated under the signature(s) of the officials signing the BGs. Bank Guarantee should be issued from a Nationalised / Scheduled Bank in India.	
21	**Integrity Pact:** a) Bidder shall submit duly signed Integrity Pact in original, strictly as per the format (without any deviation) enclosed with the RFQ. Bidders not complying with this are liable for rejection and their bids will not be considered for evaluation. Bidders are advised to view the CVC site for the guidelines issued by CVC on adaptation of integrity Pact	
	b) In case of two bid system, the bidder is required to submit the signed pre-contract IP as part of technical bid, failing which offers are liable for rejection.	
	Vendor should sign (duly signed by authorized signatory and witness) and submit hard copy of original and signed Integrity Pact as per the format placed at Part-IV of RFQ in a sealed envelope. The envelope should be marked as "Integrity Pact" indicating Tender Reference and due date. The sealed separate envelope (superscribed with tender number& due date) containing the signed Integrity pact should reach us at the following address on or before the tender due date and time: DY. General Manager (IMM)-MCSRDC HAL-MCSRDC Hindustan Aeronautics Ltd. Vimanapura Post, Bangalore-560017	
	c) The Buyer has appointed Independent External Monitor for this Pact in consultation with the Central Vigilance Commission as follows: Shri Rajiv, IPS (Retd.) e-mail: shreerajiv1975@gmail.com Shri Gangaram Aloria, IAS (Retd) email:aloriag@yahoo.co.uk	
	d) If any complaint with regard to violation of the IP is received by the buyer in a procurement case, the buyer shall refer the complaint to the Independent External Monitors for their comments / enquiry	
	g) If the Independent External Monitors need to peruse the records of the buyer in connection with the complaint sent to them by the buyer, the buyer shall make arrangement for such perusal of records by the Independent External Monitors	
	h) The signed IP will form part of the contract/purchase order, in the event of placement of order	
	i) In case Bidders have submitted signed IP to HAL with any material change / deviations / different format (from HAL's approved format the bids of such bidders will be rejected	
	j) The bidder may approach IEM nominated only for integrity related issues. Bidders may seek clarification on specific tender / RFQ / NIT related queries on-line only from (Contact Person) within the specified period at the following contact details. Address of Division: Dy. General Manager (IMM)-MCSRDC HAL-MCSRDC Hindustan Aeronautics Ltd. Vimanapura Post, Bangalore-560017 Phone No: +91-80-22322747 Contact Person: Sri Patri Suresh Kumar, Mob: +91 8480247367, e-mail: suresh.patri@hal-india.co.in	
22	The import content of the final supplies/deliverables made to HAL should not have any items or components imported from Countries which Govt. of India has restrictions. Not declaring such imports are liable for rejection.	

23	**Warranty: (Please refer technical requirement document Encl-1)** i. The each control loading System supplied by the vendor shall carry onsite warranty for 24 months from the date of acceptance by HAL as per Para No. 2.2.3. ii. The vendor shall warrant that the Control Loading System shall confirm to the technical specifications and shall perform according to the said technical specifications. Any technical changes or modifications or any repair or replacement or maintenance arising during warranty period to meet the technical specifications shall be done free of cost by the vendor. The Control Loading System and associated accessories supplied shall be free from defects in materials & workmanship and fit for the intended purpose. iii. Vendor shall ensure that the annual cumulative downtime period for the Control Loading system and associated accessories does not exceed 10% of the warranty period. Warranty of the Control loading system would be extended by such duration of downtime. Record of the down time would be maintained by user in log book. iv. Vendor shall either repair or replace the faulty item during warranty period to meet the uptime requirement as per Para iii mentioned above. Vendor shall put all the efforts to provide the warranty services on highest priority to meet the uptime requirement as & when defect is notified to the vendor.	
24	**Delivery: (Please refer technical requirement document Encl-1)** The delivery timelines with respect to control loading system are given below. Vendor is required to strictly comply with the time lines. Table-2: Delivery Schedule S/N. | Control Loading System Activities | Time line 1 | Preliminary Design Review (PDR) | T_0+1 Months 2 | Critical Design Review (CDR) | T_0+3 Months 3 | Delivery of 1st set of control loading system along with 1st set of spares at HAL, Bengaluru. | T_0 + 10 Months 4 | Installation, completion of standalone testing and Integration testing of 1st Set of control loading system at HAL, Bengaluru and Training | T_0 + 11 Months 5 | Completion of Factory Acceptance Test (FAT) and rectification of observations specific to vendor Scope of Work (if any) noticed during FAT of 1st FBFMS at HAL, Bangalore | T_0 + 20 Months 6 | Completion of Site Acceptance Test (SAT) and rectification of observations specific to vendor Scope of Work (if any) noticed during SAT of 1st FBFMS at Site1 | T_0 + 23 Months 7 | Delivery of 2nd set of control loading system along with 2nd set of spares at HAL, Bengaluru. | T_0 + 22 Months 8 | Installation and completion of standalone testing and Integration testing of 2nd Set of Control Loading System at HAL, Bengaluru | T_0 + 23 Months 9 | Completion of Factory Acceptance Test (FAT) and rectifiction of observations specific to vendor Scope of Work (if any) noticed during Factory Acceptance Testing of 2nd FBFMS HAL, Bangalore | T_0 + 29 Months 10 | Completion of Site Acceptance Test (SAT) and rectifiction of observations specific to vendor Scope of Work (if any) noticed during Site Acceptance Testing of 2nd FBFMS at Site 2 | T_0 + 32 Months **Note 1**: T_0 : Date of placement of Purchase Order **Note 2**: The items should be supplied as per the delivery schedule indicated above. As time is the essence of this programme for integration of control loading system on simulator, deviations from the schedules will not be acceptable to HAL and may render the bid submitted by the vendor liable to be rejected.	
24 A	**Repeat Order Requirement:** In the event of placement of purchase order, HAL reserves the right to place repeat order for the same items by any of its Divisions within 12 months from the date of completion of the original order.The repeat order may be placed up to 100% of the value of the original order either by single order or multiple orders totaling to 100% value of the original order. The prices, terms and conditions of the repeat order shall be the same as that of the original order.	
	Terms of Payment: In the event of an order, 100% payment of each milestones as indicated below will be made within 30 days from the date of receipt and acceptance each milestone, by NEFT/ RTGS or any other latest Electronic Payment remittance mode.	

25

Milestone No.	Activity	Time line (in	% Payment
1	Preliminary Design Review (PDR)	T_0+1	5%
2	Critical Design Review (CDR)	T_0+3	5%
3	Delivery of 1st Set of Control loading system along with 1st set of spares at HAL, Bengaluru.	T_0 + 10	25%
4	Installation, completion of standalone testing and Integration testing with FBFMS of 1st Set of Control loading system at HAL, Bengaluru.	T_0 + 11	
5	Completion of Factory Acceptance Test (FAT) and rectifiction of observations specific to vendor Scope of Work (if any) noticed during FAT of 1st FBFMS at HAL, Bangalore	T_0 + 20	5%
6	Completion of Site Acceptance Test (SAT) and rectifiction of observations specific to vendor Scope of Work (if any) noticed during SAT of 1st FBFMS at Site1	T_0 + 23	10%
7	Delivery of 2nd Set of Control loading system along with 2nd set of spares at HAL, Bangalore	T0 + 22	30%
8	Installation and completion of Standalone testing and Integration testing of 2nd Set of control loading system at HAL, Bangalore	T_0 + 23	
9	Completion of Factory Acceptance Test (FAT) and rectifiction of observations specific to vendor Scope of Work (if any) noticed during Factory Acceptance Testing of 2nd FBFMS HAL, Bangalore	T_0 + 29	10%
10	Completion of Site Acceptance Test (SAT) and rectifiction of observations specific to vendor Scope of Work (if any) noticed during Site Acceptance Testing of 2nd FBFMS at Site 2	T_0 + 32	10%

Note 1: T0 : Date of placement of Purchase Order
Note 2: The items should be supplied as per the delivery schedule indicated above. As time is the essence of this programme for integration of control loading system on simulator, deviations from the schedules will not be acceptable to HAL and may render the bid submitted by the vendor liable to be rejected.

In case bidder offers any other terms of payment and any financing cost which has to be borne by HAL, the same will be taken for commercial evaluation and appropriate loading will be done.

26 Any order, resulting from the enquiry, shall be governed by the General Terms and Conditions of Contract of HAL and any party quoting against this enquiry shall be deemed to have read and understood these terms and conditions and to have quoted subject to these terms and conditions .

27 When counter terms and conditions have been offered by a tenderer, HAL shall not be deemed to be governed by such terms and conditions unless specific written acceptance thereof has been given by HAL.

28 Any terms & conditions which has not been the part of the bid or Purchase Order, if put forward in subsequent correspondence, shall not be considered by HAL.

29 Disregard of any instructions, may result in your offer being ignored.

30 Canvassing by tender form, including unsolicited letter on tender submitted or post tender corrections shall render their tenderers liable for rejection.

31 **BRIBES AND GIFTS**
Any bribe, commission, gift or advantage given, promised or offered by or on behalf of the contractor or his parties, agent or servant or any one on his or their behalf to any officer, servant, representative or agent of HAL or any person on his or their behalf in relation to the obtaining or to the execution of this or any other contract with HAL shall in addition to any criminal liability which the contractor may incur, subject the contractor to the cancellation of this and all other contracts with HAL and also to payment of any loss or damage resulting from any such cancellation under clauses-8 and 10 thereof. Any question or dispute as to the commission of any offence under the present clause shall be settled by HAL in such manner and on such evidence or information as they may think fit and sufficient and their decision shall be final and conclusive.

32 **CONFIDENTIALITY:-**
The Supplier shall hold confidential technical data and information supplied by the Purchaser or on behalf of the Purchaser and shall not reproduce any such technical data or information or divulge the same to any third party without the prior written consent of the Purchaser. The Purchaser shall hold confidential technical data and information supplied by the Supplier or on behalf of the Supplier and shall not reproduce any such technical data or information or divulge the same to any third party without prior written consent of the Supplier except as far as may be necessary for either party to carry out its obligations under this Contract.

33 **Intellectual Proprietary Rights (IPR):** In the development orders, where technical inputs/assistance is provided to the vendors, the Intellectual Proprietary Rights (IPR) will rest with HAL. Vendor will not directly deal with HAL's customer for these items.

34	**FALL CLAUSE :-** The price quoted shall be in no event exceed the lowest price at which you sell the stores or offer to sell stores of identical description to any person(s) / organization including the purchases by any department of the Govt. of India, the State Govt. or any statutory undertaking of the Govt. of India / State Govt., as the case may be during the period till the completion of the performance of the order placed and during currency of the order. If at any time during the said period, the contractor reduces the sales price, sells or offers to sell such stores to any person/organization including the purchaser or any department of Central Govt. or any Dept. of State Govt., or any statutory undertaking of the Central or State Govt., as the case may be at a price lower than the price chargeable under the contract, he shall forthwith notify such reduction/sale or offer to sale to the Hindustan Aeronautics Limited and the price payable under the contract for the stores supplied after the date of coming into force of such reduction or sale or offer to sale shall stand correspondingly reduced.	
35	**Immunity to Government of India:** It is expressly understood and agreed by and between supplier & purchaser that purchaser is entering into this contact solely on its own behalf and not on behalf any other person or entity. In particular, it is expressly understood and agreed that Government of India is not a party to this contract and has no liabilities, obligations or right hereunder. It is expressly understood and agreed that purchaser is an independent legal entity with power and authority to enter into contracts solely on its own behalf under the applicable laws of India and general principles contract law. Supplier expressly agreed acknowledges and understand that purchaser is not an agent, representative or delegate to the Government of India. It is further agreed and understood that Government of India is not and shall not be liable for any acts, omissions, commissions, breaches or other wrongs arising out of the contract. Accordingly, supplier hereby expressly waives releases and foregoes any and all actions,including counterclaims, impleader claims or counter claims against the Government of India arising out of this contract and covenants as to any manner, claim cause or action or this whatsoever arising out of or under this contract.	
36	**JURISDICTION :-** The Court at Bangalore only shall have jurisdiction to deal with and to decide any legal matter whatsoever arising out of this contract.	
37	**INDEMNITY :-** The contractor shall at all times indemnify HAL against all claims which may be made in respect of the stores for infringement of any right protected by patent, registration of design or trade mark.	
38	**ARBITRATION :-** All disputes or differences whatsoever arising between the parties out of or relating to the construction meaning and operating or effect of this contract or the breach thereof shall be settled by arbitration in accordance with the rules of arbitration of the ICA/ICADR and the award made in pursuance thereof shall be binding on the parties.	
39	**Quality Requirements:** 1.Requirements regarding the need for the supplier to - notify HAL of nonconforming product, - obtain HAL approval for nonconforming product disposition, - notify HAL of changes in product and/or process, changes of suppliers, changes of manufacturing facility location and where required obtain organization approval and - flow down to the supply chain the applicable requirements including customer requirements, 2). Records retention requirements and 3). Right to access by HAL, customer and regulatory authorities to the applicable areas of all facilities at any level of the supply chain, involved in the order and to all applicable records.	
	Compliance of AS9100D (Please refer Appendix-1)	
40	**Agents / Agency Commission:** The seller confirms and declares to the buyer that the seller is the original manufacturer or authorized distributor / stockiest of original manufacturer or Govt. Sponsored / Designated Export Agencies (applicable in case of countries where domestic laws do not permit direct export by OEMS) of the stores referred to in this offer / contract / Purchase order and has not engaged any individual or firm, whether Indian or Foreign whatsoever, to intercede, facilitate or in any way to recommend to Buyer or any of its functionaries, whether officially or unofficially, to the award of the contract / purchase order to the Seller; nor has any amount been paid, promised or intended to be paid to any such individual or firm in respect of any such intercession, facilitation or recommendation. The Seller agrees that if it is established at any time to the satisfaction of the Buyer that the present declaration is in any way incorrect or if at a later stage it is discovered by the Buyer that the Seller has engaged any such individual / firm, and paid or intended to pay any amount, gift, reward, fees, commission or consideration to such person, party, firm or institution, whether before or after the signing of this contract / purchase order, the Seller will be liable to refund that amount to the Buyer. The Seller will also be debarred from participating in any RFQ / Tender for new projects / program with Buyer for a minimum period of five years. The Buyer will also have a right to consider cancellation of the Contract / Purchase order either wholly or in part, without any entitlement or compensation to the Seller who shall in such event be liable to refund all payments made by the Buyer in terms of the Contract / Purchase order along with interest at the rate of 2% per annum above LIBOR (London Inter Bank Offer Rate) (for foreign vendors) and Base Rate of SBI (State Bank of India) plus 2% (for Indian vendors). The Buyer will also have the right to recover any such amount from any contracts / Purchase order concluded earlier with Buyer.	

41	**RISK PURCHASE:** In the event the SUPPLIER fails to deliver the goods or any consignments thereof within 90 days following the conclusion of the period prescribed for such delivery, HAL reserves the right to procure from elsewhere at the risk and cost of the Supplier and any extra expenditure incurred due to this purchase is payable by the Supplier.	
42	**Short-Closure of Contract:**HAL reserve the right to short-close this contract with prior notice to the vendor at any time during the tenure of the contract. The liability of HAL in this case will be limited to the extent of the cost as assessed by HAL in its opinion, incurred by vendor till the point of termination of contract. However in any case, the maximum liability of HAL is limited to order value to the extent of short closed quantities.	
43	**TERMINATION OF CONTRACT:** In case of breach of contract, aggrieved party shall advise in writing to other regarding specific terms of contract which has been breached and will provide reasonable opportunity to improve upon within a specific time period, failing which the aggrieved party have the right to terminate the contract with prior notice	
44	**EXIT CRITERIA:** i. The contract/order may be terminated under the following circumstances: a. In the event of unsatisfactory performance by the vendor during the contract period, or any of the information provided by the supplier is found to be untrue, or supplier is found to have attempted to influence any person involved with the contract through unethical means, the contract shall be terminated with 6 month's advance notice without any financial implication to HAL. Notwithstanding the foregoing, in cases where it is found that a supplier is engaged in unethical practices, the same shall be barred from participating in the future contracts for a period of 2 Years. b. If there is change in the Customer requirement, contract shall be terminated with 6 month's advance notice. The liability of HAL in this case will be agreed mutually. c. The supplier is declared bankrupt or becomes insolvent. d. The delivery of material is delayed due to causes of Force Majeure by more than 6 months. e. Based on the decision of the Arbitration Tribunal. ii. In the event of termination of contract by either party the supplier shall ensure the following: a. IPRs are transferred to HAL to enable HAL to proceed on the work with other suppliers. Suppliers also will render all assistance till the other suppliers fully take over the balance work. b. Transfer title and deliver all or any part thereof of the supplies, materials, work-in-process, finished Products, Tooling, drawings and data produced or acquired by vendor specifically for the Product being terminated. c. Supplier shall ensure supply of products and its components /Spares at least for a period of 2 years from the date of such termination".	
45	Land Border with India: Restrictions under Rule 144(xi) of the General Financial Rules (GFRs) issue by GoI, Ministry of Finance, Department of Expenditure (DOE): Any bidder from a country which shares a Land Border with India will be eligible to bid in this tender, ONLY, if the bidder is registered with the Competent Authority (i.e. the registration committee constituted by the Department for Promotion of Industry and Internal Trader (DPIIT). However, the bidders from those countries (even if sharing a land border with India) to which Government of India has extended lines of credit or in which the Government of India is engaged in development projects are not required to register with Competent Authority and will be eligible to bid in this tender.	
	All the participating bidders have to mandatorily submit the relevant certificate as per format attached as ANNEXURE-II A (either Type-I or Type-II), at the time of submiting the Technical bid along with their offer.	
46	**Declaration of Non-supply of Counterfeit Products:** The bidder has to comply and categorically indicate that the parts/product supplied is manufactured by OEM or through authorized distributor of OEM. Counterfeit parts/products should never be supplied. At any point if it is found that the part and/or product supplied are found to be counterfeit, penal actions as per company rules and existing laws may be initiated against the vendor.	

****